The Printing Cookbook

Patrick A Powell

papowell@lprng.com
AStArt Technologies
6741 Convoy Court,
San Diego, CA 92111
Phone 858-874-6543
Fax 858-751-2435

The Printing Cookbook

by Patrick A Powell

Copyright © 2001 Patrick Powell

This is a set of *Recipes for Printing*, a set of procedures that can be used to set up and diagnose printing in a range of system environments. The main emphasis will be on using the **LPRng** print spooler, either by itself or with other print spooling systems.

Table of Contents

Preface ..... **i**
1. Acknowledgements i
2. Conventions i
3. Disclaimer ii

1. Introduction - The Basics and Variations **1**
1.1. Checking the Printing System 3
1.2. Fixing the Problems 4

2. Simple Spooling **6**
2.1. Setting Up The Print Queues 6
2.2. Diagnostics for Spooling Problems 8
2.3. What Went Wrong With My Job? 11
2.4. Diagnostics for **lpd** Problems 14

3. Printers **18**
3.1. Interface 18
3.2. Parallel Port 18
3.3. Network Ports 20
3.4. Sending To SMB (Samba, Microsoft) Printer, Novell, Appletalk 23
3.5. Serial Port 25

4. Printer Job Formats **27**
4.1. PostScript 27
4.2. PCL 30
4.3. Printer Job Language (PJL) and PostScript, PCL 31
4.4. Text Files 32
4.5. Magical Mystery Proprietary Format 32
4.6. Printing Test Pages 34

5. Filters **36**
5.1. Writing Your Own Filter 39
5.2. The **LPRng** IFHP Filter 41
5.3. Taming the Wild Phaser Printer 45

6. Banner Pages and Accounting **47**
6.1. Suppressing Banner Pages 47
6.2. Forcing Banner Pages 48
6.3. Generating Banner Pages 48
6.4. Accounting 49
6.5. Accounting Gotchas 50
6.6. Accounting Including Banner Pages 50

7. Printer Pools and Load Sharing **52**
7.1. Implementing Smart Load Balancing 53
7.2. Using `:chooser` Exit Codes 55

8. Wildcards, Bounce Queues, and Forwarding 56
8.1. Bounce Queues 56
8.2. Adding -Z Options Using Bounce Queues 56
8.3. Adding Options By Modifying Control File 57
9. Form Support and Hold Queues 59
9.1. Hold Queues 59
10. Interfacing to Vintage, Legacy, and SunOS Print Spoolers 63
11. Managing Enterprise Level Printing Systems 64
11.1. Templates and Standard Configurations 64
11.2. Master Print Servers, One User Printcap 65
11.3. Master Print Servers, Local Spooling 65
11.4. Master Print Servers, Selection by User 65
11.5. The Great Grand Dad Of All Printcap Files 66
11.6. Using Printcap Filters and Central Databases 66
12. LPRngTool 68
A. LPRng 71
A.1. Documentation 71
A.2. Installation 72
A.3. License 72
A.4. Commercial Support 72
A.5. Web Site, FTP Site, and Mirrors 73
A.6. Mailing List 73
A.7. PGP Public Key 73
B. References and Standards 75
B.1. RFCs 75
B.2. PostScript 75
B.3. HP PCL 5 75
B.4. HP PJL 75
B.5. PDF 76
C. RFC 1179 - Line Printer Daemon Protocol 77
C.1. Ports and Connections 77
C.2. Protocol Requests and Replies 79
C.3. Job Transfer 80
C.4. Data File Transfer 82
C.5. Control File Contents 83
C.6. **lpq** Requests 85
C.7. **lprm** Requests 86
C.8. LPC Requests 86
C.9. Block Job Transfer 88
C.10. Authenticated Transfer 89

List of Tables

3-1. Network Print Server Configuration Information....21
C-1. RFC1179 Commands....79
C-2. Control File Lines and Purpose....83
C-3. LPC Commands....86

List of Figures

1. **lpq** status....i
1-1. Print Spooler Architecture....1
1-2. Configuration Files....1
1-3. Printcap....1
1-4. lpd.conf Defaults File....2
1-5. lpd.perm Permissions File....2
1-6. Clients and Configuration Files....3
1-7. ${HOME}/.printcap Information....3
1-8. Using **checkpc**....4
1-9. Using **checkpc** -f....4
2-1. Basic Printcap Entry....6
2-2. Run checkpc....6
2-3. Check for Running Server....6
2-4. Run **lpq**....7
2-5. Run **lpc**....7
2-6. Run **lpr**....7
2-7. Run **lprm**....8
2-8. Enable Printing....8
2-9. Using **lpr** -V....8
2-10. The **lpr** Options....8
2-11. Debug Options....9
2-12. The **lpr** -D1 Output....9
2-13. Using **lpr** -Dnetwork....10
2-14. Debugging **lpq**....11
2-15. Basic **lpq** Information....12
2-16. Using the **lpq** -l Option....12
2-17. Using the **lpq** -L Option....13
2-18. Job Completion....13
2-19. Summary Status Displays....14
2-20. **lpd** Options....14
2-21. Using **lpd** Debug Options....15
2-22. Debugging Spool Queue....16
2-23. Setting Queue Debug Options....16
2-24. `log` File....16
3-1. Printer Types....18
3-2. Interface Types....18
3-3. Parallel Port....18

3-4. Parallel Port Printcap 19
3-5. Loading Linux Parallel Port Driver 19
3-6. Parallel Port Problems 20
3-7. Network Ports 20
3-8. Network Port Printcap 20
3-9. Benefits of Network Port Printcap 21
3-10. Network Print Server 21
3-11. Using Program To Send To Printer 23
3-12. Protocols, Packages, and Transfer Programs 23
3-13. Printcap For Transfer Programs 23
3-14. Samba **smbclient** Wrapper 24
3-15. `$PRINTCAP_ENTRY` 25
3-16. Novell and Appletalk Wrappers 25
3-17. Serial Port 25
3-18. Serial Port Printcap 26
4-1. Page Description Lanaguages 27
4-2. How To Identify Print Formats 27
4-3. Using the **file** Application 27
4-4. One PostScript Page 28
4-5. Generate One Page 28
4-6. PostScript Document Structuring Conventions 28
4-7. Tools for PostScript Document Manipulation 29
4-8. Selection of Pages + 4up Printing 29
4-9. PostScript Output 29
4-10. End Of PostScript Job: ^D (CTRL-D) 30
4-11. One PCL Page 30
4-12. Generate One Page 31
4-13. PJL Example 31
4-14. Text Files and The Jaggies 32
4-15. Fixing The Jaggies 32
4-16. Magical Mystery Formats 32
4-17. GhostScript To The Rescue 33
4-18. GhostScript Devices 33
4-19. GhostScript Support 34
4-20. Printing Test Pages To Parallel Port 34
4-21. Using Netcat (**nc**) 34
5-1. Filters 36
5-2. Filter Specification in Printcap Entry 36
5-3. Specifying Job Datafile Format 36
5-4. Filter Execution Environment 37
5-5. Command Line Options 37
5-6. Filter Exit Codes 38
5-7. Solid As A Rock Filter Operation 38
5-8. Solid As A Used Paper Coffee Filter Operation 39
5-9. Filter Template in **perl** 39
5-10. How To Determine The Type of Job File 40
5-11. Printcap for Filter 40
5-12. Using Filter With $debug=1 40

5-13. Using Filter With $debug=0 41
5-14. **ifhp** 41
5-15. ifhp.conf Configuration Information 41
5-16. Default Printer Magic Cookies 41
5-17. PostScript Only Printer 42
5-18. Using the **ifhp** Filter 43
5-19. Example of **ifhp** Operation 43
5-20. Using -Z to Pass Options to **ifhp** 44
5-21. Testing **ifhp** Operations 44
5-22. Phaser/Appsocket Support 45
6-1. Changing JetDirect Configuration 47
6-2. Printcap Option `:sh` and **lpr** -h (No Header) Option 47
6-3. Removing Banner Lines 48
6-4. Forcing Banner Pages 48
6-5. Generating Banner Page 48
6-6. Basic Accounting Information 49
6-7. Accounting File Information 49
6-8. Filter Accounting Information 50
6-9. Accounting Gotchas 50
6-10. Accounting Using Banner Pages 51
7-1. Printer Pools and Load Sharing 52
7-2. Load Balancing Printcap 52
7-3. Load Balancing to Remote Queues 52
7-4. Printcap for Chooser 53
7-5. Chooser Program Operation 53
7-6. Filter Template in **Perl** 53
7-7. Choosing A Destintation 54
7-8. Chooser Exit Codes 55
8-1. Evil (BAD) Way 56
8-2. Not So Evil Way 56
8-3. Add Options Using `:append_z` 57
8-4. Diabolically Fiendishly Clever Method 57
8-5. Using `update_z` 58
9-1. Hold Queues 59
9-2. All Hold Queues 59
9-3. Releasing Jobs for Printing 59
9-4. Releasing Jobs For Scheduled Print Run 60
9-5. Using Job Classes 60
9-6. Setting New Job Classes and Disabling Job Classes 61
9-7. Modifying Control File Using **update_class** 61
9-8. The **update_class** Filter 61
10-1. Using `:bk` (Berkeley Kompatible) Flag 63
11-1. Templates in Printcaps 64
11-2. Using **lpc** client all 64
11-3. Master User Printcap File, No Local Spooling 65
11-4. Master User Printcap File, Local Spooling 65
11-5. Master User Printcap File, No Local Spooling 65
11-6. All In One 66

11-7. Printcap Path Configuration Information 66
11-8. Example of Returned Printcap Value 66
12-1. Starting Screen 68
12-2. Printcap Entry Selection 68
12-3. Add A Printer 68
12-4. Option Specification 68
12-5. Advanced Options 69
12-6. **ifhp** Options 69
12-7. Saving Printcap Entry 70
12-8. Checkpc Results 70

Preface

A good cookbook will provide the reader not only with a set of recipes that sound delicious but also with a set of instructions that will allow novices to experts to prepare them. Of course, there are cookbooks for novices, cookbooks for experts, and then the gastronmic encyclopedias.

These *Recipes for Printing* are a collection of old favorites, not of the author, but of the hundreds of users of **LPRng** and other print spooling systems. They are not a complete discussion of the printing *haute cuisine*, but deal more with the preparation of the *Minnesota Hot Dish*. As I find from personal experience, you need to make a casserole for a family dinner far more often than to prepare *mijotée de lentilles au lardons, dos de poisson-chat rôti, au vinaigre d'herbes* for that one-time special dinner.

The various test files, scripts and examples in this document are also in the **LPRng** distribution in the `/LPRng-xxx/UTILS` directory.

Enjoy! Bon Appetite!

1. Acknowledgements

I would like to thank all of the **LPRng** users who so relentlessly tried an incredible number of permutations and combinations printers, software, and networks, and whose requests for *just one more feature* led to the development of the **LPRng** software.

2. Conventions

Many examples will show commands run by ordinary or privleged users. The prompt character will indicate the user:

User	Prompt
Normal user	`host {20} % su`
`root`	`host {2} #`

Recipes and major examples will be show as:

Figure 1. lpq status

```
h110: {64} % lpq
Printer: lp@h110
 Queue: no printable jobs in queue
 Status: job 'cfA711h110.private' removed at 17:11:43.919
 Filter_status: done at 17:11:43.823
```

Smaller sets of code or commands will be shown as:

```
Queue: no printable jobs in queue
```

3. Disclaimer

THIS DOCUMENTATION AND THE DESCRIBED SOFTWARE AND PROCEDURES IS PROVIDED BY THE AUTHORS "AS IS" AND ANY EXPRESS OR IMPLIED WARRANTIES, INCLUDING, BUT NOT LIMITED TO, THE IMPLIED WARRANTIES OF MERCHANTABILITY AND FITNESS FOR A PARTICULAR PURPOSE ARE DISCLAIMED. IN NO EVENT SHALL THE AUTHORS BE LIABLE FOR ANY DIRECT, INDIRECT, INCIDENTAL, SPECIAL, EXEMPLARY, OR CONSEQUENTIAL DAMAGES (INCLUDING, BUT NOT LIMITED TO, PROCUREMENT OF SUBSTITUTE GOODS OR SERVICES; LOSS OF USE, DATA, OR PROFITS; OR BUSINESS INTERRUPTION) HOWEVER CAUSED AND ON ANY THEORY OF LIABILITY, WHETHER IN CONTRACT, STRICT LIABILITY, OR TORT (INCLUDING NEGLIGENCE OR OTHERWISE) ARISING IN ANY WAY OUT OF THE USE OF THIS DOCUMENTATION, EVEN IF ADVISED OF THE POSSIBILITY OF SUCH DAMAGE.

Chapter 1. Introduction - The Basics and Variations

Figure 1-1. Print Spooler Architecture

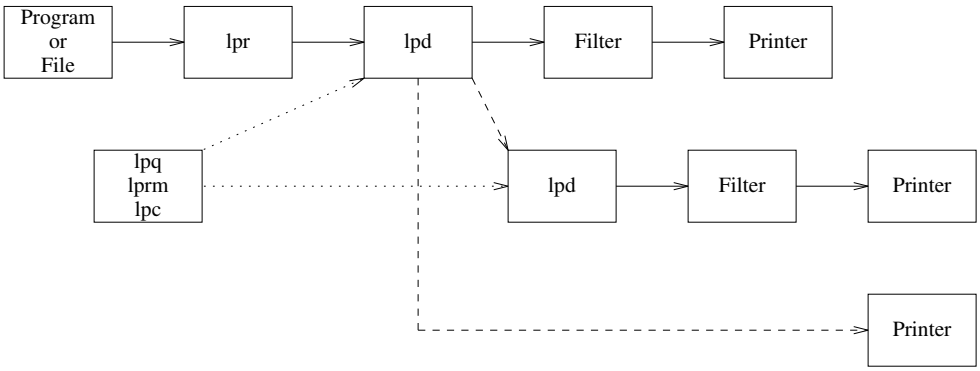

The **LPRng** print spooling system has the components shown in Figure 1-1. A program generates output and pipes it to the **lpr** application or the **lpr** application is used to print a file. The **lpr** application connects to the **lpd** print server over a network connection and then transfers the print job data and print options. The **lpd** server will store the job information Figure 1-2 in a spool directory and when the output device is available will transfer the job to the printing device.

Since the print job may not be in the appropriate format for the ouput device a **filter** program may be used to prepare the output data or perform special operations on the output device. Alternatively, the print job can be forwarded to another print spooler Figure 1-1, transferred directly to a TCP/IP network port.

Figure 1-2. Configuration Files

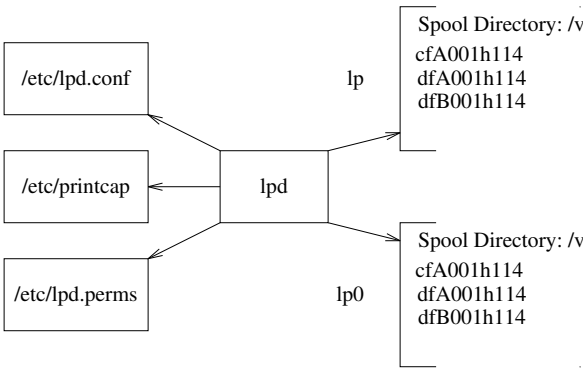

As shown in Figure 1-2, the **LPRng** print spooler uses the `/etc/printcap`, `/etc/lpd.conf`, and `/etc/lpd.perms`, files to get its operational parameters. The the `/etc/printcap` file defines a set of spool queues, each of which holds print jobs. The a print job consists of a *control* file (`cfAnnnHHHHHHH`) and one or more data files (`dfAnnnHHHHHHH` `dfBnnnHHHHHHH`, etc); the control file contains information such as the user name, file names, and printing options, while the data files contain the data to be printed.

Figure 1-3. Printcap

```
# Common configuration information
.common:sd=/var/spool/lpd/%P
  :sh:mx=0:force_localhost

# forward to remote spooler
lp:cm=Default Printer
 :tc=.common
 :lp=raw@10.0.0.1
       #  legacy - :rp=raw:rm=10.0.0.1

# lp0 - open a device
lp0|aliasforlp0:cm=Parallel Port Printer:\
  :tc=.common:lp=/dev/lpt0:

# lp1 - open a network connection
lp1:tc=.common:lp=10.0.0.14%9100

# lp2 - run a program
lp2:tc=.common:lp=|/usr/local/bin/smbprint
```

The `/etc/printcap` file format is very simple in appearance but complex in information. By convention, lines starting with `#` are comments; a printcap entry starts with the entry name followed by one or more *aliases*, followed by options.

The `:tc` option specifies a printcap entry for inclusion; there can be more than one entry and they are processed in order that they appear in the `:tc` list. The other options are processed *after* the `:tc` list; this means that the printcap options overide the ones from the `:tc` list. If a entry name starts with a period (`.`), then the **LPRng** system uses it only for `:tc` lists. This is similar to the use of *hidden* files, i.e. - files whose names start with a period are not displayed by the **ls** command.

Figure 1-4. lpd.conf Defaults File

```
# Purpose: always print banner, ignore lpr -h option
#   default ab@ (FLAG off)
# Purpose: query accounting server when connected
#   default achk@ (FLAG off)
# Purpose: accounting at end (see also af, la, ar, as)
#   default ae=jobend $H $n $P $k $b $t  (STRING)
# Purpose: name of accounting file (see also la, ar)
#   default af=acct  (STRING)

# Purpose: use long job number (0 - 999999) when a job is submitted
#   default longnumber@ (FLAG off)
longnumber
```

The `/etc/lpd.conf` file can be used to override the set of default values for the print spooler or other printing applications. By the way, all of the **LPRng** options and their default values are defined in this file in the comments.

Figure 1-5. lpd.perm Permissions File

```
ACCEPT SERVICE=C SERVER REMOTEUSER=root,papowell
ACCEPT SERVICE=C LPC=lpd,status,printcap
REJECT SERVICE=C
ACCEPT SERVICE=M SAMEHOST SAMEUSER
ACCEPT SERVICE=M SERVER REMOTEUSER=root
REJECT SERVICE=M
DEFAULT ACCEPT
```

The `/etc/lpd.perms` file (Figure 1-5) is used by **lpd** to determine who is allowed to perform various operations. The format of this file is modelled on that of a *packet filter*. When a request is made, the file is scanned for matches; each match sets a success or fail condition. The success or fail of the last match (or the last default value) will determine whether or not to perform the operation.

Figure 1-6. Clients and Configuration Files

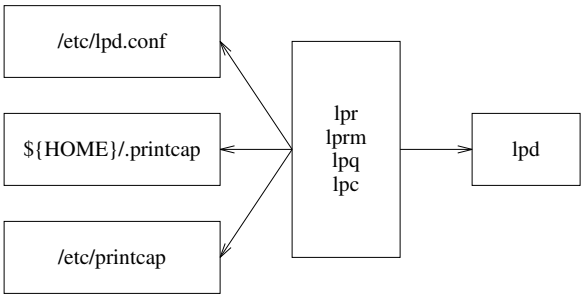

The **LPRng** client applications **lpr**, **lprm**, **lpq**, and **lpc** use the `/etc/lpd.conf`, `/etc/printcap` and `${HOME}/.printap` files (if they exist) (Figure 1-6). The values in the `${HOME}/.printcap` file are used to override the values in the `/etc/printcap` file, and the first printcap entry in the `${HOME}/.printap` file becomes the default printer for the user (see Figure 1-7).

Figure 1-7. ${HOME}/.printcap Information

```
# force your default printer
#  - forces first entry to be lp_out
lp_out:

# send everything to your secret server
*:lp=%P@secret_server:force_localhost@

# combine the two above:
lp|*:lp=%P@secret_server:force_localhost@

# and of course, you can specify extra lpr options
# for those special purpose printers and total abuse
landscape:lpr= -Zlandscape -Plp
```

1.1. Checking the Printing System

Figure 1-8. Using checkpc

```
h110: {1} % su
Password:
h110# checkpc
h110# checkpd -V
LPRng-3.7.10, Copyright 1988-2001 Patrick Powell, <papowell@lprng.com>
Checking for configuration files '/etc/lpd.conf'
  found '/etc/lpd.conf', mod 0100644
Checking for printcap files '/etc/printcap'
  found '/etc/printcap', mod 0100644
 DaemonUID 1, DaemonGID 1
Using Config file '/etc/lpd.conf'
LPD lockfile '/var/run/lpd.515'
...
Checking printer 'lp'
 Checking directory: '/var/spool/lpd/lp'
   directory '/var'
   directory '/var/spool'
   directory '/var/spool/lpd'
   directory '/var/spool/lpd/lp'
  checking 'control.lp' file
  checking 'status.lp' file
  checking 'status' file
  checking 'log' file
  checking 'acct' file
```

The **checkpc** utility will read and parse the printcap file. It will report a zillion errors if something is wrong.

1.2. Fixing the Problems

Figure 1-9. Using checkpc -f

```
h110: {1} % checkpc
Warning -  bad directory - /var/spool/lpd/lp
Warning -   Printer_DYN 'lp' spool dir '/var/spool/lpd/lp' needs fixing
Warning -  bad directory - /var/spool/lpd/lp0
Warning -   Printer_DYN 'lp0' spool dir '/var/spool/lpd/lp0' needs fixing
h110: {2} % su
Password:
h110# checkpc -f
Warning -   changing ownership '/var/spool/lpd/lp' to 1/1
Warning -   changing ownership '/var/spool/lpd/lp' to 1/1
Warning -   changing ownership '/var/spool/lpd/lp0' to 1/1
Warning -   changing ownership '/var/spool/lpd/lp0' to 1/1
h110# exit
```

```
h110: {3} % checkpc
h110: {4} % checkpc
```

The `checkpc -f` (`-f` for *fix*) will make **checkpc** attempt create missing files, set permissions, and take basic corrective actions. If it fails, then you have probably a *very* bad `/etc/printcap` file.

Chapter 2. Simple Spooling

This section covers the basic facilities that you will probably encounter when trying to set up a print queue. We will start with a basic print queue and then run through the setup steps.

Figure 2-1. Basic Printcap Entry

```
# Common configuration information
.common:sd=/var/spool/lpd/%P
  :sh:mx=0:force_localhost
lp:cm=Default Printer, Forward to remote
 :tc=.common
 :lp=raw@10.0.0.1

# lp0 - open a device
lp0:cm=Parallel Port Printer
  :tc=.common:lp=/dev/lpt0:
```

2.1. Setting Up The Print Queues

Figure 2-2. Run checkpc

```
h110: {1} % checkpc
Warning -  bad directory - /var/spool/lpd/lp
Warning -   Printer_DYN 'lp' spool dir '/var/spool/lpd/lp' needs fixing
Warning -  bad directory - /var/spool/lpd/lp0
Warning -   Printer_DYN 'lp0' spool dir '/var/spool/lpd/lp0' needs fixing
h110: {2} % su
Password:
h110# checkpc -f
Warning -   changing ownership '/var/spool/lpd/lp' to 1/1
Warning -   changing ownership '/var/spool/lpd/lp' to 1/1
Warning -   changing ownership '/var/spool/lpd/lp0' to 1/1
Warning -   changing ownership '/var/spool/lpd/lp0' to 1/1
h110# exit
h110: {3} % checkpc
h110: {4} % checkpc
```

First, you run `checkpc -f`. This will tell you if something is wrong with the printcap.

Figure 2-3. Check for Running Server

```
h110: {5} % lpc lpd
Printer 'lp@localhost' - cannot open connection - Connection refused
Make sure the remote host supports the LPD protocol
h110: {6} % su
Password:
h110# lpd
h110# lpc lpd
```

```
lpd server pid 6418 on h110.private
h110# exit
exit
h110: {7} % lpc lpd
lpd server pid 6418 on h110.private
```

Next, you make sure the **lpd** server is running, and if it is not, then you restart it.

Figure 2-4. Run lpq

```
h110: {373} % lpq -a
Printer: lp@h110
 Queue: no printable jobs in queue
Printer: lp0@h110
 Queue: no printable jobs in queue
```

You now make sure that you can get the print queue status.

Figure 2-5. Run lpc

```
h110: {374} % lpc stop lp lp0
Printer: lp@h110
lp@h110.private: stopped
Printer: lp0@h110
lp0@h110.private: stopped
h110: {375} % lpq -a
Printer: lp@h110 (printing disabled)
 Queue: no printable jobs in queue
Printer: lp0@h110 (printing disabled)
 Queue: no printable jobs in queue
```

Use **lpc** to disable printing.

Figure 2-6. Run lpr

```
h110: {376} % echo hi >/tmp/hi
h110: {377} % lpr /tmp/hi
h110: {378} % lpq
Printer: lp@h110 (printing disabled)
 Queue: 1 printable job
 Server: no server active
 Rank   Owner/ID          Class Job Files         Size Time
1      papowell@h110+445    A   445 /tmp/hi          3 17:40:51
h110: {379} % lpr -Plp0 /tmp/hi
h110: {380} % lpq -Plp0
Printer: lp0@h110 (printing disabled)
 Queue: 1 printable job
 Server: no server active
 Rank   Owner/ID          Class Job Files         Size Time
1      papowell@h110+449    A   449 /tmp/hi          3 17:41:05
```

Now try spooling a job.

Figure 2-7. Run lprm

```
h110: {381} % lprm
Printer lp@h110:
  checking perms 'papowell@h110+445'
  dequeued 'papowell@h110+445'
h110: {382} % lprm -Plp0
Printer lp0@h110:
  checking perms 'papowell@h110+449'
  dequeued 'papowell@h110+449'
```

Now try removing a job.

Figure 2-8. Enable Printing

```
h110: {383} % lpc enable lp lp0
Printer: lp@h110
lp@h110.private: enabled
Printer: lp0@h110
lp0@h110.private: enabled
```

Finally, enable printing.

2.2. Diagnostics for Spooling Problems

Figure 2-9. Using lpr -V

```
h110: {388} % lpr -V /tmp/hi
LPRng-3.7.10, Copyright 1988-2001 Patrick Powell, <papowell@lprng.com>
sending job 'papowell@h110+29' to lp@localhost
connecting to 'localhost', attempt 1
connected to 'localhost'
requesting printer lp@localhost
sending control file 'cfA029h110.private' to lp@localhost
completed sending 'cfA029h110.private' to lp@localhost
sending data file 'dfA029h110.private' to lp@localhost
completed sending 'dfA029h110.private' to lp@localhost
done job 'papowell@h110+29' transfer to lp@localhost
```

The first line of defense is to see what is happening when you try to spool a job. The `lpr -V` (`-V` for *Verbose*) will show a simple high level trace.

Figure 2-10. The lpr Options

```
h110: {389} % lpr -=
lpr: Illegal option '='
Usage: lpr [-Pprinter[@host]] [-A] [-B] [-Cclass] [-Fformat] [-G] [-Jinfo]
   [-(K|#)copies] [-Q] [-Raccountname]  [-Ttitle]  [-Uuser[@host]] [-V]
   [-Zoptions] [-b] [-m mailaddr] [-h] [-i indent] [-l] [-w width ] [-r]
   [-Ddebugopt ] [--] [ filenames ...  ]
 -A          - use authentication specified by AUTH environment variable
 -B          - filter files and reduce job to single file before sending
 -C class    - job class
 -D debugopt - debugging flags
 -F format   - job format
   -b,-l        - binary or literal format
    c,d,f,g,l,m,p,t,v are also format options
 -G          - filter individual job files before sending
 -J info     - banner and job information
 -K copies, -# copies   - number of copies
 -P printer[@host] - printer on host
 -Q          - put 'queuename' in control file
 -Raccntname - accounting information
 -T title    - title for 'pr' (-p) formatting
 -U username - override user name (restricted)
 -V          - Verbose information during spooling
 -X path     - user specified filter for job files
 -Y          - connect and send to TCP/IP port (direct mode)
 -Z options  - options to pass to filter
 -h          - no header or banner page
 -i indent   - indentation
 -k          - do not use tempfile when sending to server
 -m mailaddr - mail final status to mailaddr
 -r          - remove files after spooling
 -w width    - width to use
 --          - end of options, files follow
 filename '-'  reads from STDIN
 PRINTER, LPDEST, NPRINTER, NGPRINTER environment variables set default printer.
LPRng-3.7.10, Copyright 1988-2001 Patrick Powell, <papowell@lprng.com>
```

Use the `-=` option to see the available options.

Figure 2-11. Debug Options

```
h110: {392} % lpr -D=
debug usage: -D [ num | flag=num | flag=str | flag | flag@ | flag+N ]*
  flags recognized: network[+N,@], database[+N,@], lpr[+N,@],
   lpc[+N,@], lprm[+N,@], lpq[+N,@], log[+N,@],
   test=num
```

The `-D=` option shows the debugging flags available.

Figure 2-12. The lpr -D1 Output

```
h110: {395} % lpr -D1 /tmp/hi >&/tmp/x
2001-10-18-05:29:05 [8052]  Initialize: /dev/null fd 3
2001-10-18-05:29:05 [8052]  initsetproctitle: using builtin
2001-10-18-05:29:05 [8052] lpr  Setup_uid: OriginalEUID 0, OriginalRUID 1001
2001-10-18-05:29:05 [8052] lpr  Setup_uid: OriginalEGID 1001, OriginalRGID 1001
2001-10-18-05:29:05.761 [8052] lpr  Setup_configuration: starting, Allow_getenv 0
2001-10-18-05:29:05.761 [8052] lpr  Setup_configuration: Configuration file '/etc/lpd.co
2001-10-18-05:29:05.761 [8052] lpr  Setup_configuration: Require_configfiles_DYN '1'
2001-10-18-05:29:05.761 [8052] lpr  Get_config: required '1', '/etc/lpd.conf'
2001-10-18-05:29:05.762 h110 [8052] lpr
   Get_local_host: ShortHost_FQDN=h110, FQDNHost_FQDN=h110.private
2001-10-18-05:29:05.763 h110 [8052] lpr
   Is_server 0, DaemonUID 1, DaemonGID 1, UID 0, EUID 0, GID 1001, EGID 1001
2001-10-18-05:29:05.763 h110 [8052] lpr
   Setup_configuration: Host 'h110.private', ShortHost 'h110', user 'papowell'
...
```

The **lpr** `-D1` (diagnostic level 1) shows a summary of the various steps taken to send the job. If you want more detail, try **lpr** `-D2`; or even **lpr** `-D3`;.

Figure 2-13. Using lpr -Dnetwork

```
h110: {400} % lpr -Dnetwork /tmp/hi
lp: getconnection: START host localhost, timeout 10, connection_type 1
lp: getconnection: fqdn found localhost.my.domain, h_addr_list count 1
lp: Link_dest_port_num: port 515 = 515
lp: getconnection: AGAIN port 808, min 512, max 1023, count 0, connects 0
lp: Link_dest_port_num: port 515 = 515
lp: getconnection: sock 3, src ip 127.0.0.1, port 808
lp: getconnection: dest ip 127.0.0.1, port 515
lp: getconnection: connection to 'localhost' socket 3, errormsg 'No Error'
lp: Link_send: host 'localhost' socket 3, timeout 6000
lp: Link_send: str '^Blp
', count 4, ack 0xbfbfc3d0
lp: Link_send: final status NO ERROR
lp: Link_send: host 'localhost' socket 3, timeout 6000
lp: Link_send: str '^B142 cfA065h110.private
', count 24, ack 0xbfbfbf90
lp: Link_send: final status NO ERROR
lp: Link_send: host 'localhost' socket 3, timeout 6000
lp: Link_send: str 'Hh110.private
Ppapowell
J/tmp/hi
CA
Lpapowell
Apapowell@h110+65
D2001-10-18-05:34:18.939
Qlp
N/tmp/hi
fdfA065h110.private
UdfA065h110.private
```

```
', count 143, ack 0xbfbfbf90
lp: Link_send: final status NO ERROR
lp: Link_send: host 'localhost' socket 3, timeout 6000
lp: Link_send: str '^C3 dfA065h110.private
', count 22, ack 0xbfbfbf24
lp: Link_send: final status NO ERROR
lp: Link_send: host 'localhost' socket 3, timeout 6000
lp: Link_send: str ", count 1, ack 0xbfbfbf24
lp: Link_send: final status NO ERROR
```

The **lpr** `-Dnetwork` (network diagnostic level 1) shows the network operations performed by **lpr**. If you want more detail, try **lpr** `-Dnetwork+2` or even **lpr** `-Dnetwork+3`.

Figure 2-14. Debugging lpq

```
h110: {1} % lpq -=
lpq: Illegal option '='
usage: lpq [-aAclV] [-Ddebuglevel] [-Pprinter] [-tsleeptime]
  -A           - use authentication specified by AUTH environment variable
  -a           - all printers
  -c           - clear screen before update
  -l           - increase (lengthen) detailed status information
                 additional l flags add more detail.
  -L           - maximum detailed status information
  -n linecount - linecount lines of detailed status information
  -Ddebuglevel - debug level
  -Pprinter    - specify printer
  -s           - short (summary) format
  -tsleeptime  - sleeptime between updates
  -V           - print version information

h110: {2} % lpq -D1
2001-10-18-05:39:09 [8090]  Initialize: /dev/null fd 3
2001-10-18-05:39:09 [8090]  initsetproctitle: using builtin
2001-10-18-05:39:09 [8090] lpq  Setup_uid: OriginalEUID 0, OriginalRUID 1001
...

h110: {3} % lpq -Dnetwork
lp: getconnection: START host localhost, timeout 10, connection_type 1
lp: getconnection: fqdn found localhost.my.domain, h_addr_list count 1
lp: Link_dest_port_num: port 515 = 515
lp: getconnection: AGAIN port 862, min 512, max 1023, count 0, connects 0
lp: Link_dest_port_num: port 515 = 515
lp: getconnection: sock 3, src ip 127.0.0.1, port 862
...
```

The **lpq**, **lprm**, and **lpc** applications also support the `-=` and `-D` (debug) options.

2.3. What Went Wrong With My Job?

Figure 2-15. Basic lpq Information

```
h110: {1} % lpr /tmp/hi
h110: {1} % lpq
Printer: lp@h110
 Queue: 1 printable job
 Server: pid 8741 active
 Unspooler: pid 8742 active
 Status: processing 'dfA740h110.private', size 3, format 'f',
    IF filter 'ifhp' at 08:16:58.465
 Filter_status: code = 10003, 'Warming Up' at 08:17:02.045
 Rank   Owner/ID         Class Job Files      Size Time
active papowell@h110+740  A    740 /tmp/hi       3 08:16:58
```

The first thing to do is check the status of your job with **lpq**. This will show the current jobs in the queue and **lpd** server. The `Server` value is the process that is responsible for sending jobs to the printer. It starts the `Unspooler` process that does the actual transfer to the remote system. Each time a job is processed a new `Unspooler` process is created. The `Server` process stays active until there is no further work to be done for the print queue.

Figure 2-16. Using the lpq -l Option

```
h110: {2} % lpq -l
Printer: lp@h110
 Queue: 1 printable job
 Server: pid 8741 active
 Unspooler: pid 8742 active
 Status: printing job 'papowell@h110+740' at 08:16:58.465
 Status: processing 'dfA740h110.private', size 3, format 'f',
     IF filter 'ifhp' at 08:16:58.465
 Filter_status: getting end using 'pjl job/eoj' at 08:16:59.902
 Filter_status: code = 10003, 'Warming Up' at 08:17:02.045
 Rank   Owner/ID          Class Job Files      Size Time
active papowell@h110+740  A     740 /tmp/hi       3 08:16:58
h110: {3} % lpq -lll
Printer: lp@h110
 Queue: 1 printable job
 Server: pid 8741 active
 Unspooler: pid 8742 active
 Status: accounting at start at 08:16:58.455
 Status: opening device 'h14%9100' at 08:16:58.455
 Status: printing job 'papowell@h110+740' at 08:16:58.465
 Status: processing 'dfA740h110.private', size 3, format 'f',
     IF filter 'ifhp' at 08:16:58.465
 Filter_status: data sent at 08:16:59.902
 Filter_status: sent job file at 08:16:59.902
 Filter_status: getting end using 'pjl job/eoj' at 08:16:59.902
 Filter_status: code = 10003, 'Warming Up' at 08:17:02.045
 Rank   Owner/ID          Class Job Files      Size Time
```

```
active papowell@h110+740  A     740 /tmp/hi       3 08:16:58
```

The **lpq** `-l` (*longer*) option increases the number of `Status` and `Filter_status` lines shown. These lines come from the `status.%P` and `status` files in the spool queue. Adding more `-l` options increases the amount of status shown.

Figure 2-17. Using the lpq -L Option

```
h110: {4} % lpq -L
Printer: lp@h110
 Queue: 1 printable job
 Server: pid 8741 active
 Unspooler: pid 8742 active
 Status: waiting for subserver to exit at 08:16:58.451
 Status: subserver pid 8742 starting at 08:16:58.455
 Status: accounting at start at 08:16:58.455
 Status: opening device 'h14%9100' at 08:16:58.455
 Status: printing job 'papowell@h110+740' at 08:16:58.465
 Status: processing 'dfA740h110.private', size 3, format 'f',
     IF filter 'ifhp' at 08:16:58.465
 .....

 Filter_status: decoded job type 'PCL' at 08:16:59.901
 Filter_status: job type 'PCL' at 08:16:59.901
 Filter_status: transferring 3 bytes at 08:16:59.902
 Filter_status: 100 percent done at 08:16:59.902
 Filter_status: data sent at 08:16:59.902
 Filter_status: sent job file at 08:16:59.902
 Filter_status: getting end using 'pjl job/eoj' at 08:16:59.902
 Filter_status: code = 10003, 'Warming Up' at 08:17:02.045
 .....

 Rank   Owner/ID          Class Job Files     Size Time
active papowell@h110+740    A   740 /tmp/hi      3 08:16:58
```

If you want to see *LOTS* of status, use `lpq -L`, which shows all the avilable status information.

Figure 2-18. Job Completion

```
h110: {5} % lpq
Printer: lp@h110
 Queue: no printable jobs in queue
 Status: job 'cfA740h110.private' removed at 08:18:07.776
 Filter_status: done at 08:18:07.756
h110: {6} % lpq -lll
Printer: lp@h110
 Queue: no printable jobs in queue
 Status: printing job 'papowell@h110+740' at 08:16:58.465
 Status: processing 'dfA740h110.private', size 3, format 'f',
     IF filter 'ifhp' at 08:16:58.465
 Status: IF filter 'ifhp' filter finished at 08:18:07.757
```

```
 Status: printing finished at 08:18:07.757
 Status: accounting at end at 08:18:07.774
 Status: finished 'papowell@h110+740', status 'JSUCC' at 08:18:07.774
 Status: subserver pid 8742 exit status 'JSUCC' at 08:18:07.775
 Status: lp@h110.private: job 'cfA740h110.private' printed at 08:18:07.775
 Status: job 'cfA740h110.private' removed at 08:18:07.776
 Filter_status: transferring 3 bytes at 08:16:59.902
 Filter_status: 100 percent done at 08:16:59.902
 Filter_status: data sent at 08:16:59.902
 Filter_status: sent job file at 08:16:59.902
 Filter_status: getting end using 'pjl job/eoj' at 08:16:59.902
 Filter_status: code = 10003, 'Warming Up' at 08:17:02.045
 Filter_status: end of job detected at 08:18:06.457
 Filter_status: pagecounter 105341 after 1 attempts at 08:18:07.756
 Filter_status: pagecounter 105341, pages 1 at 08:18:07.756
 Filter_status: done at 08:18:07.756
```

When your job is finished, you can use the `lpq -lll` options to see the final results of processing the job.

Figure 2-19. Summary Status Displays

```
h110: {7} % lpq -s
lp@h110 0 jobs
h110: {239} % lpq -s -a
lp@h110 0 jobs
lp0@h110 0 jobs (printing disabled)
h110: {8} % lpc status
 Printer    Printing Spooling Jobs  Server Subserver Redirect Status/(Debug)
lp@h110      enabled  enabled    0    none    none
h110: {9} % lpc status all
 Printer    Printing Spooling Jobs  Server Subserver Redirect Status/(Debug)
lp@h110      enabled  enabled    0    none    none
lp0@h110    disabled  enabled    0    none    none
h110: {10} % exit
```

The `lpq -s` (*short* status) shows a single summary line for status. Adding the `-a` (*all* queues) will print information for all the print queues.

The `lpc status` command queries the **lpd** server and reports the status of the queues operated by the **lpd** server. The `lpd status all` will show the status of all the print queues.

2.4. Diagnostics for lpd Problems

Figure 2-20. lpd Options

```
h110# lpd -=
lpd: Illegal option '='
usage: lpd [-FV] [-D dbg] [-L log]
 Options
```

```
 -D dbg      - set debug level and flags
                 Example: -D10,remote=5
                 set debug level to 10, remote flag = 5
 -F          - run in foreground, log to STDERR
               Example: -D10,remote=5
 -L logfile  - append log information to logfile
 -V          - show version info
h110# lpd -D=
debug usage: -D [ num | flag=num | flag=str | flag | flag@ | flag+N ]*
  flags recognized: network[+N,@], database[+N,@], lpr[+N,@],
   lpc[+N,@], lprm[+N,@], lpq[+N,@], log[+N,@],
   test=num
```

The **lpd** server can be started in debug mode. However, the amount of information produced can be overwhelming. If you need to determine what is happening during initial connection, then you will have to do this.

Figure 2-21. Using lpd Debug Options

```
h110# lpd
h110# lpd -F -D1
2001-10-18-05:56:55 [8156] lpd  Initialize: starting
...
2001-10-18-05:56:55.228 h110 [8156] lpd  lpd: listening socket fd -6
Fatal error - Another print spooler is using TCP printer
    port, possibly lpd process '8154'
2001-10-18-05:56:55.228 h110 [8156] lpd  cleanup: done, exit(1)
h110# killall lpd
h110# lpd -F -D1
2001-10-18-05:57:05 [8158] lpd  Initialize: starting
...
2001-10-18-05:57:05.800 h110 [8159] Waiting  lpd: LOOP START
2001-10-18-05:57:05.800 h110 [8159] Waiting
      lpd: starting select timeout 'yes', 600 sec, max_socks 7

---- other window
     h110: {5} % lpr /tmp/hi
----

2001-10-18-05:57:44.341 h110 [8159] Waiting
     lpd: select returned 1, error 'No Error'
2001-10-18-05:57:44.342 h110 [8159] Waiting
     lpd: fd 5 readable
2001-10-18-05:57:44.342 h110 [8159] Waiting  lpd: connection fd 8
2001-10-18-05:57:44.351 h110 [8159] Waiting  Start_worker: fd 8

2001-10-18-05:57:44.356 h110 [8171] RECV  lp: Fix_Rm_Rp_info: printer name 'lp'
2001-10-18-05:57:44.356 h110 [8171] RECV  Reset_config: starting
2001-10-18-05:57:44.361 h110 [8171] RECV
     lp: Select_pc_info: looking for 'lp', depth 0
...
```

This shows *all* of the information available about the printing operation. But it is jumbled all together. Usually you want to see just the information about a single spool queue.

Figure 2-22. Debugging Spool Queue

```
Printcap:
  lp:sd=/var/spool/lpd/%P
    :db=DebugOptions
       db=1     - output to device level 1,
       db=lpc db=lpq db=lpr db=lprm
                - incoming lpc, lpq, lpr, lprm operations

Spool Queue:  /var/spool/lpd/lp
  Default Files - created by checkpc
    control.%P  - queue control (enable, disable...)
    acct        - accounting
    status      - filter status
    status.%P   - queue status
    log         - diagnostics
```

The **checkpc** program creates a standard set of files in each spool queue, including the `log` file. The `:db=`*DebugOptions* enables debugging output for the specified operation. Information is sent to the `log` file as soon as the print queue directory and debug flags for the spool queue are determined.

Figure 2-23. Setting Queue Debug Options

```
h110# vi /etc/printcap
  set:
    lp:...
      :db=lpr
h110# lpc reread
lpd server pid 8200 on h110.private, sending SIGHUP
```

Edit the printcap. You can then use `lpc reread` to signal the **lpd** process to read the new `/etc/printcap` file.

Figure 2-24. `log` File

```
2001-10-18-06:11:30.349 h110 [8216] RECV
   lp: Receive_job: debug 'lpr', Debug 0, DbgFlag 0x1000
2001-10-18-06:11:30.349 h110 [8216] RECV
   lp: Receive_job: spooling_disabled 0
2001-10-18-06:11:30.349 h110 [8216] RECV
   lp: Receive_job: sending 0 ACK for job transfer request
2001-10-18-06:11:30.349 h110 [8216] RECV
   lp: Receive_job: from localhost.my.domain- getting file transfer line
2001-10-18-06:11:30.349 h110 [8216] RECV
   lp: Receive_job: read from localhost.my.domain-
       status 0 read 23 bytes '^B131 cfA215h110.private'
```

You can now use the `log` file to see the individual queue operations. The size of the log file is determined by the `max_log_file_size` (default is 1000Kbytes); when the log file exceeds this it is truncted to 25% of its maximum length.

Chapter 3. Printers

Figure 3-1. Printer Types

```
Printers:
  Cheap and Slow Ink Dispensers
  Not So Cheap Fast Printers
  Vintage Stuff On Sale
  Legacy Junk You Are Stuck With
```

Your office mate has just purchased a nice new $99 ink-jet printer and wants to use it on his office desktop. Your boss calls you in and tells you that the new *PlattenPusher 5500* printer will arrive and it needs to be operational ASAP. And finally, you pick up a really good bargin on a used *HP4mPlus* laser printer, which all the folks on the **LPRng** mailing list recommend as the most reliable (and SLOW...) printer they ever used.

With your luck, probably all three happen on the same day. Welcome to the wonderful world of printers.

3.1. Interface

Figure 3-2. Interface Types

```
Connection:
  Parallel port : write only (no status)
                  read/write (maybe you get status)
  Serial port:    read/write (status)
  Network:        serial port emulator
                  parallel port emulator
                  print spooler emulator
                  whacko interface
```

The type of interface on your printer is usually a function of the printer cost and speed. The low cost/low speed printers usually have a parallel port interface, while the higher cost/higher speed printers usually have both a parallel port *and* a network interface. Serial ports are usually found only on older model printers or those which have very special facilities.

3.2. Parallel Port

Figure 3-3. Parallel Port

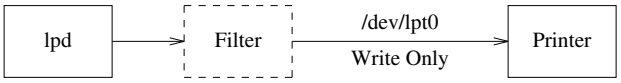

Some printers provide *status* information. In order to do this they need a *bidirectional* communications channel. The parallel port interface found on the original X86 PC/XT/ATX systems was write only.

However, there were a couple of signals (`OUT OF PAPER`, `ERROR`, etc.) that provided status information to the computer system. By monitoring these signals the host computer could tell the user that there were problems with the printer. Fiendishly clever engineers discovered that they could use these signals to implement a *bidirectional data channel* over the parallel port. They could even put multiple devices (daisy chained) on the parallel port. Needless to say, of the hundreds of companies that used bidirectional parallel interfaces no two of them used the same method.

In a fit of desperation, the IEEE1284 standard (well, actually 3 standards) were developed to allow at least some sort of general consensus on how a bidirectional parallel port should work.

If you are interested in the details about Parallel Ports, see http://www.fapo.com/1284int.htm for a nice introduction, and the IEEE1394 Trade Association Home Page http://www.1394ta.com/ (http://www.1394ta.org/) for pointers to other information.

The good news is that if your printer is IEEE1284 compliant, then it has a functional bidirectional interface that will return status and other information. The bad news, *really* bad news, and *really really* bad news is a) there is no software level API for using bidirectionality; b) the parallel IO drivers that exist differ from version to version; c) most of the time the status returned by the printer is useless anyways.

Given this set of problems I recommend that you:

- Put only one device (your printer) on each parallel port.
- Do not expect to get status information back from the printer.

Figure 3-4. Parallel Port Printcap

```
lp:lp=/dev/lpt0
  :sd=/var/spool/lpd/%P
```

As shown in Figure 1-1, the printcap entry for a parallel port (without a filter) is really simple. If your printer is offline or powered down, **lpd** will not be able to open the parallel port and you will see an endless list of error messages in the status file.

Figure 3-5. Loading Linux Parallel Port Driver

```
[papowell@h112 papowell]$ su
Password:
[root@h112 papowell]# echo </dev/lp0
[root@h112 papowell]# cd /proc/sys/dev/parport/
[root@h112 parport]# ls default  parport0
[root@h112 parport]# cd parport0
[root@h112 parport0]# ls autoprobe  autoprobe0  autoprobe1  autoprobe2
   autoprobe3  base-addr  devices  dma  irq  modes  spintime
[root@h112 parport0]# cat autoprobe
CLASS:PRINTER; MODEL:DESKJET 670C;
MANUFACTURER:HEWLETT-PACKARD;
DESCRIPTION:Hewlett-Packard DeskJet 670C;
COMMAND SET:MLC,PCL,PML;
```

The Linux system uses loadable module drivers for the parallel ports and newer releases support the IEEE1284 *device probe* functions. You can use the command shown in Figure 3-5 to load the modules; the `echo </dev/lp0` command tries to open the device in `read` mode, and then exits after reading nothing... which might suggest that you cannot get status from the device. If you have the `/proc` system installed, then you can see what the IEEE1284 probe function returned.

Figure 3-6. Parallel Port Problems

```
One Interrupt per Output Character
   - One Interrupt per Blocks of Characters (DMA)
   - Hope that DMA works
May operate by polling
Don't try to daisy chain devices
```

While you may think that you are getting a high throughput to the parallel port, in actual fact it may be very slow. In the worst case you will get a an interrupt for every character output. Even worse, sometimes the parallel port driver will *spin block* for a small period of time in the hopes that a character will be accepted by the printer so it can send another one. Finally, while many users have successfully daisy chained multiple devices, there is a resounding silence from them when asked about the success of simultaneous use of the devices.

To add insult to injury, some systems do not even support interrupts with their parallel port hardware. To do IO, they periodically *poll* the output device to see if it is ready to accept another character.

3.3. Network Ports

Figure 3-7. Network Ports

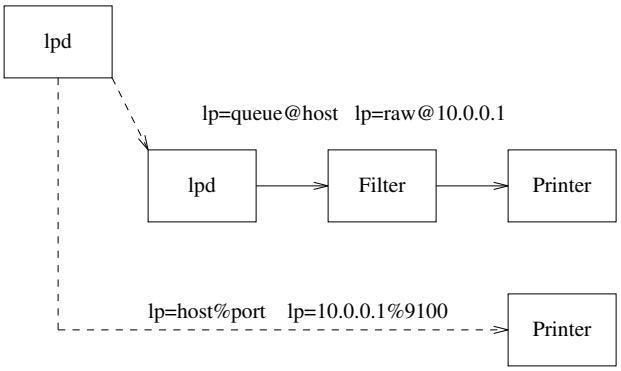

Most devices that support a network connection do so by either providing support for a print spooler interface (**lpd**) or by emulating a bidirectional connection to the printing device (*socket* or *appsocket*). If your printer provides status reporting, it is *strongly* recommended that you use the socket interface. This will allow you to monitor conditions reported by the printer.

Figure 3-8. Network Port Printcap

```
lp:lp=10.0.0.14%9100
  :sd=/var/spool/lpd/%P

lp2:lp=raw@10.0.0.14
  :sd=/var/spool/lpd/%P
  # legacy :rp:rm support
  # :rp=raw:rm=10.0.0.14
```

The printcap for a network printer is shown in Figure 3-8. You can use the `:rp:rm` options if you want.

Figure 3-9. Benefits of Network Port Printcap

```
High Speed
Low Error Rate (+ Error Detection)
Long Distances
Very low system overhead
```

Network port printing is effectively the highest speed. The TCP/IP protocol provides both flow control and error detection/correction. The printer and host system can be separated by quite large distances. Finally, the overhead of the TCP/IP connection is very low in terms of hardware and software.

Figure 3-10. Network Print Server

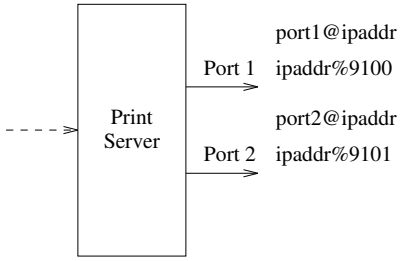

If you have legacy systems that have serial or parallel ports, you can buy a *Network Print Server* box. These have a network interface and one or more parallel or serial port interfaces.

Table 3-1. Network Print Server Configuration Information

Manufacturer	Model	RFC1179 Port Name (rp=XXX)	Send to TCP port
Cannon Printer (http://www.cannon.com/)	Cannon 460 PS, no hard drive	`xjdirect`	- Unknown if supported -
	Cannon 460 PS hard drive	`xjprint` - print immediately, `xjhold` - print later	- Unknown if supported -

Manufacturer	Model	RFC1179 Port Name (rp=XXX)	Send to TCP port
Digital Products Inc. (http://www.digprod.com/)	NETPrint Print Server	`PORTn`, where `n` is port on server	- Unknown if supported -
Electronics For Imaging Inc. (http://www.efi.com/)	Fiery RIP i series	`normalq` or `urgentq`	- Unknown if supported -
	Fiery RIP XJ series	`xjprint`	- Unknown if supported -
	Fiery RIP XJ+ and SI series	`print_Model`, e.g. `print_DocuColor`	- Unknown if supported -
	Fiery models ZX2100, ZX3300, X2, X2e	`print`	- Unknown if supported -
Emulex Corp. (http://www.emulex.com/)	NETJet/NETQue print server	`PASSTHRU`	- Unknown if supported -
Extended Systems Inc. (http://www.extendsys.com/)	ExtendNet Print Server	`Printer`*n*, where `n` is port on server	- Unknown if supported -
Hewlett-Packard (http://www.hp.com/)	JetDirect interface card	`raw`	9100
Hewlett-Packard (http://www.hp.com/)	JetDirect Multiport Server	`port 1 - raw1, port 2 - raw2, etc.`	port 1 - 9100, port 2 - 9101, etc.
I-Data (http://www.i-data.com/)	Easycom 10 Printserver	`par1` (parallel port 1)	- Unknown if supported -
	Easycom 100 Printserver	`LPDPRT1`	- Unknown if supported -
IBM (http://www.printers.ibm.com/)	Network Printer 12, 17, 24, and 24PS	`PASS`	- Unknown if supported -
Lantronix (http://www.lantronix.com/)	EPS1, EPS2	`EPS_X_S1 (serial) port 1, EPS_X_P1 (parallel) port 2,` etc.	3001 (port 1), 3002 (port 2), etc.
QMS (http://www.qms.com/)	Various Models	`RAW`	35 (AppSocket)
Tektronix (http://www.tek.com/color_prints/)	Tektronix printer network cards	`PS` (PostScript), `PCL` (PCL), or `AUTO`(Auto-selection between PS, PCL, or HPGL). Not reliable.	9100 (AppSocket on some models)
Rose Electronics (http://www.rosel.com)	Microserve Print Servers	lp	9100
Xerox (http://www.xerox.com/)	Models 4505, 4510, 4517, 4520	`PASSTHRU`	2501 (AppSocket on some models)

Manufacturer	Model	RFC1179 Port Name (rp=XXX)	Send to TCP port
	Model 4512	`PORT1`	10001 (programmable)
	Model N17	`RAW`	9100
	Models N24 and N32	`RAW`	2000
	Models 4900, 4915, 4925, C55	`PS`	2000
	Document Centre DC220/230	`lp`	- Unknown if supported -

All company, brand, and product names are properties of their respective owners.

3.4. Sending To SMB (Samba, Microsoft) Printer, Novell, Appletalk

Figure 3-11. Using Program To Send To Printer

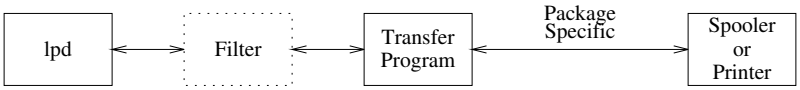

There are a wide number of other print spooling systems that have been developed over the years. Most of these use proprietary or arcane protocols to transfer files. These include the SMB protocol used by Microsoft, the Novell print spooler support, and the Apple corporation Appletalk (Copyright, Trademarks where applicable). These systems usually run on or with non-UNIX Operating Systems or on proprietary hardware. But over the years packages have been developed to interface to these systems.

Figure 3-12. Protocols, Packages, and Transfer Programs

```
Protocol        Package       Transfer Program
SMB (CIFS)      Samba         smbclient + wrapper
   WWW: http://www.samba.org
Novell Netware  ncpfs (Linux) nprint + wrapper
   FTP: ftp.gwdg.de/pub/linux/misc/ncpfs
   (Also Linux Kernel Documentation/filesystems)
Appletalk       CAPS          pap + wrapper
   WWW: http://sourceforge.net/projects/netatalk
   WWW: http://www.umich.edu/~rsug/netatalk
```

Each of these programs will transfer a print job to a remote system.

Figure 3-13. Printcap For Transfer Programs

```
lp:
  OR
  :lp=|/usr/local/lib/filters/smbprint
```

```
  OR
  :lp=|/usr/local/lib/filters/ncpprint
  OR
  :lp=|/usr/local/lib/filters/atalkprint
  # and the magic happens here
  :options=authfile="auth" host="h114" printer="lp" \
       workgroup="ASTART"
  # or you can use
  #:options=share="//h114/lp" workgroup="ASTART"
  # See the LPRng/UTILS directory
```

You can specify a *program* to do the transfer to the remote host. The program will connect to the remote system and transfer `STDIN` to the printer. Errors will be written to `STDERR` and be put in the log by **LPRng**.

Figure 3-14. Samba smbclient Wrapper

```
#!/bin/sh
# configuration
smbclient=/usr/local/bin/smbclient

# get options from $PRINTCAP_ENTRY environment variable
PATH=/bin:/usr/bin:/usr/local/bin
options=`echo "${PRINTCAP_ENTRY}" | sed -n 's/:options=//p' `
echo OPTIONS $options >&2
if [ -n "$options" ] ; then
    # paranoia:  $options=`echo |perl -sp 's/[^\w\s,-+%="\']/ /'`
    eval dummy=v `echo $options`;
fi

if [ "$oldversion" != "" -a "$authfile" != "" -a -f "$authfile" ] ; then
    . $authfile;
    $authfile=
fi

if [ "$translate" = "yes" ]; then
 command="translate ; print -"
else
 command="print -"
fi

if [ "$share" = "" ] ; then share="//$host/$printer" ; fi

echo $smbclient "$share" ${password:+password} -E \
 ${username:+-U} ${username:+username} ${hostip:+-I} \
 $hostip -N ${workgroup:+-W} $workgroup \
 ${authfile:+-A} $authfile -c "$command" >&2
$smbclient "$share" ${password} -E \
 ${username:+-U} ${username} ${hostip:+-I} \
 $hostip -N ${workgroup:+-W} $workgroup \
 ${authfile:+-A} $authfile -c "$command" >&2
```

The **smbprint** script is run with the `$PRINTCAP_ENTRY` environment variable set to the printcap (See Figure 3-15). The value is scanned for the `:options` line and then this line is used with `eval` to set variables. This is a slight security risk and you should not have any metacharacters in the options field, so you can optionally strain them out or you can trust in your editting skills in the printcap.

Figure 3-15. `$PRINTCAP_ENTRY`

```
lp:
  :lp=|/usr/local/lib/filters/smbprint
  :options=authfile="auth" host="h114" printer="lp" workgroup="ASTART"
```

There older versions of the **smbclient** required the user name and password on the command line. Unfortunately, the `ps` command would show the command line options, allowing users to see the password. Newer versions can read username and password from an authentication file. We can use either version by setting the `oldversion` option.

Finally, we echo the command for logging purposes (note that `$password` is *not* displayed and then run the `smbclient` command.

Figure 3-16. Novell and Appletalk Wrappers

```
ncpprint:
 ....
 usercmd=""
 if [ "$username" != "" ]; then
   if [ "$password" != "" ]; then
     usercmd="-U $username -P $password"
   else
     usercmd="-U $username -n"
   fi
 fi
 nprint=/usr/bin/nprint -S $server -q $printer \
    $usercmd -N - 2>/dev/null

atalkprint:
 ...
 /usr/bin/pap -p "$username:$printer@$host"
```

This general template can also be used with the **nprint** command from the Novell Netware support package to send files to a Novel Netware printers and the **pap** command from the Netatalk package.

3.5. Serial Port

Figure 3-17. Serial Port

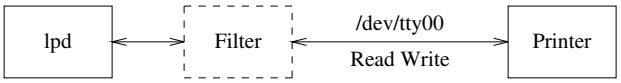

A serial line is usually bidirectional in operation, but there are very few printers that will return status information. The most notable exception to this are `PostScript` printers. If you use a serial port printer, it is absolutely essential that you implement *flow control*, and almost mandatory that you use `hardware` or `RTS-CTS` (Request To Send and Clear To Send) flow control. Finally, you need to have the serial line operate in `RAW` mode, so that the serial line driver does not abuse the output stream by introducing extraneous `CR-LF` sequences, and changing control characters such as `ESC` (Escape) into `^E` sequences.

Figure 3-18. Serial Port Printcap

```
lp:lp=/dev/tty00
  :stty=raw crtscts 19200
  :sd=/var/spool/lpd/%P
  # optional Open Read Write
  #:rw
```

The `:stty=...` option is used to set line characteristics and takes a subset of the **stty** application parameters. You need to set the line speed and mode. If you need to get status information back from the printer, you should add the `:rw` (Open Read-Write) flag.

As you might suspect, the serial port is limited by the line speed. In addition, it has a higher rate of errors than you might expect. Most printers that use a serial port are for *legacy* purposes or have low speed and low data transfer requirements.

Chapter 4. Printer Job Formats

Figure 4-1. Page Description Lanaguages

```
Printer Input File Formats:

  Postscript (Level 1, 2, 3)
  PCL (PCL 5)
  Text (Really Legacy PCL)

  PJL
    Configuration Specification for Job
     - PostScript or PCL or HPGL or ...

  Magic Mystery Proprietary Format
```

Most printers will only print jobs that have a particular format. These formats are called *Page Description Languages*. The most common are PostScript, PCL, and HPGL.

Figure 4-2. How To Identify Print Formats

```
Print Job Job Types
   Start of File           File Type

   %!                      PostScript - Level Unknown
   %!PS-Adobe-1.0          PostScript - Level 1.0
   %!PS-Adobe-2.0          PostScript - Level 2.0
   %!PS-Adobe-2.1          PostScript - Level 2.0
   %!PS-Adobe-3.0          PostScript - Level 2.0
   \033%-12345X@PJL        HP Printer Job Language data
   \033E\033               HP PCL printer data
   This ...                Text
```

The type of file can be identified by looking at the content near the start of the file. This is how the **file** program determines the type of file Figure 1-1.

Figure 4-3. Using the file Application

```
h110: {1} % file *
Makefile:          ASCII English text
atalkprint:        Bourne shell script text executable
logo.gif:          GIF image data, version 89a, 250 x 91,
one.pcl:           HP PCL printer data
one.ps:            PostScript document text conforming at level 3.0
one.pjl:           HP Printer Job Language data
rewindstdin:       ELF 32-bit LSB executable
testpage-a4.fig:   FIG image text, version 3.1
testpage-a4.ps:    PostScript document text conforming at level 2.0
testpage.fig:      FIG image text, version 3.1
```

4.1. PostScript

Figure 4-4. One PostScript Page

```
%!PS-Adobe-3.0
%% one page (i.e. - a page with a 1 on it)
%%/Times-Roman
/Courier
findfont 200 scalefont setfont
72 300 moveto
(1) show
showpage


 -- from PostScript Reference Manual 1986
    Adobe (www.adobe.com)
```

This is an example of a PostScript File.

Figure 4-5. Generate One Page

```
h110: {1} % echo 1 |groff -Tps >/tmp/one.ps
h110: {2} % more /tmp/one.ps
%!PS-Adobe-3.0
%%Creator: groff version 1.16.1
%%CreationDate: Thu Oct 18 12:48:45 2001
%%DocumentNeededResources: font Times-Roman
%%DocumentSuppliedResources: procset grops 1.16 1
%%Pages: 1
%%PageOrder: Ascend
%%Orientation: Portrait
%%EndComments
%%BeginProlog
%%BeginResource: procset grops 1.16 1
/setpacking where{
pop
currentpacking
true setpacking
}if
/grops 120 dict dup begin
/SC 32 def
/A/show load def
/B{0 SC 3 -1 roll widthshow}bind def
```

The quick way to generate a test page is use **groff**. The `groff -Tps` outputs PostScript.

Figure 4-6. PostScript Document Structuring Conventions

```
Specifies how a PostScript print job should be formatted
Divides the job up into a  prolog and body
The body contains pages
   - each page is in an individual section
   - each page is independant

Various Levels - 3.0 with PostScript Level 3, etc.
```

Most document generation systems produce PostScript that meets the PostScript Document Structuring Convention. This allows you to *massage* PostScript Documents in several ways.

Figure 4-7. Tools for PostScript Document Manipulation

```
GhostScript - format conversion
   WWW: http://www.ghostscript.com
PSUtils  - utilities to massage PostScript by Angus Duggan
   FTP: ftp://ftp.dcs.ed.ac.uk/pub/ajcd/
   WWW: http://www.dcs.ed.ac.uk/home/ajcd/psutils/
psbook            rearranges pages into signatures
psselect          selects pages and page ranges
pstops            performs general page rearrangement and selection
psnup             put multiple pages per physical sheet of paper
psresize          alter document paper size
epsffit           fits an EPSF file to a given bounding box
getafm     (sh)   outputs PostScript to retrieve AFM file from printer
showchar   (sh)   outputs PostScript to draw a character with metric info
fixdlsrps  (perl) filter to fix DviLaser/PS output so that PSUtils works
fixfmps    (perl) filter to fix framemaker documents so that psselect etc. work
fixmacps   (perl) filter to fix Macintosh documents with saner version of md
fixpsditps (perl) filter to fix Transcript psdit documents to work with PSUtils
fixpspps   (perl) filter to fix PSPrint PostScript so that psselect etc. work
fixscribeps (perl) filter to fix Scribe PostScript so that psselect etc. work
fixtpps    (perl) filter to fix Troff Tpscript documents
fixwfwps   (perl) filter to fix Word for Windows documents for PSUtils
fixwpps    (perl) filter to fix WordPerfect documents for PSUtils
fixwwps    (perl) filter to fix Windows Write documents for PSUtils
extractres (perl) filter to extract resources from PostScript files
includeres (perl) filter to include resources into PostScript files
psmerge    (perl) hack script to merge multiple PostScript files
```

The combination of GhostScript and PSutils by Angus Duggan are a powerful combination.

Figure 4-8. Selection of Pages + 4up Printing

```
h110: {81} % psselect -p20-24 LPRng-HOWTO.ps | psnup -4 >p4up.ps
[20] [21] [22] [23] [24] Wrote 5 pages, 38404 bytes
[1] [2] Wrote 2 pages, 42769 bytes
```

Figure 4-9. PostScript Output

Figure 4-10. End Of PostScript Job: ^D (CTRL-D)

```
^D is recognized as an 'end of job'
   - causes reset of PostScript interpreter to defaults

^D%!PS-Adobe-3.0
...
^D

The Dreaded ^D at Start of Job - causes problems
  Rest of job may be ignored!
  Solution: strip off ^D at start
    (ifhp = ps_eoj_at_start@)

The Dreaded ^D at End of Job - causes problems when
  you are trying to massage postscript or append jobs
  Solution: strip off ^D everywhere
    (ifhp = ps_eoj_at_end@)
```

The `^D` (`CTRL-D`) character is evil - it usually should not be put into raw files.

4.2. PCL

Figure 4-11. One PCL Page

```
^[E^[&u600D^[&l2A^[&l0O^[&l0E^[(0N^[(s1p0s0b4101T
  ^[(s24V^[*p655x942Y1^L^[E

Note: ^[ is ESC or \033
```

```
^[E is 'reset printer configuration'
```

This is an example of a PCL file. Note that the file starts with `^[E`, or the reset configuration string. All PCL jobs should start with this so that the previous job does not cause a problem.

Figure 4-12. Generate One Page

```
h110: {1} % echo 1 | groff -Tlj4 >/tmp/one.pcl
h110: {2} % more
^[E^[&u600D^[&l2A^[&l0O^[&l0E^[(0N^[(s1p0s0b4101T
  ^[(s24V^[*p655x942Y1^L^[E
```

The quick way to generate a test page is use **groff**. The `groff -Tlj4` outputs PCL level 5. Again, watch out for the evil `^D` (`CTRL-D`) characters.

4.3. Printer Job Language (PJL) and PostScript, PCL

Figure 4-13. PJL Example

```
^[%-12345X@PJL
@PJL RDYMSG DISPLAY = ":"
@PJL USTATUSOFF
@PJL USTATUS JOB = ON
@PJL USTATUS DEVICE = ON
@PJL USTATUS PAGE = ON
@PJL USTATUS TIMED = 10
@PJL ENTER LANGUAGE = POSTSCRIPT
^D%!
%!PS-Adobe-3.0
%% one page (i.e. - a page with a 1 on it)
%%/Times-Roman
/Courier
findfont 200 scalefont setfont
72 300 moveto
(1) show
showpage
^D^[%-12345X@PJL
@PJL RDYMSG DISPLAY = ":"
@PJL EOJ NAME = ":"
@PJL USTATUSOFF
@PJL USTATUS JOB = ON
@PJL USTATUS DEVICE = ON
@PJL USTATUS PAGE = ON
@PJL USTATUS TIMED = 10
@PJL RDYMSG DISPLAY = "Done: :"
^[%-12345X
```

Printer Job Language is used to set up configuration and other facilities for a printer. It can establish defaults for printing and provide direction to the printer on how to handle job items not specified by the PostScript or PCL language.

The PJL Reset command `^[%-12345X` performs a Print Job lanaguage independent reset. This allows PJL to be used with PostScript or PCL.

4.4. Text Files

Figure 4-14. Text Files and The Jaggies

```
Text
  - usually ASCII characters

The Dreaded Jaggies

File:

   This is what you
   see on the printer

Printer output:

   This is what you
                   see on the printer
```

Text is usually just ASCII characters. Unix lines are terminated with new line (`NL` or `\012`, and when sent to a printer result in *The Jaggies*. You need to have carriage returns (`CR` or `\015` added to the file. You need to fix this by one of several methods.

Figure 4-15. Fixing The Jaggies

```
Fixing The Jaggies:
 Convert NL to CR/NL
   Quick and Dirty
     sed -e 's/$/\r/'
   OR
     lpf (LPRng utility)

 Make PCL Printer Interpret CR as CR/LF
   ^[E  ->  ^[E&k2G
   Remove the PCL Reset and add the &k2G
    (CR -> CR/LF command)
```

4.5. Magical Mystery Proprietary Format

Figure 4-16. Magical Mystery Formats

```
Magical Mystery Proprietary Format
  -  Usually a RASTER format
```

```
  -  legacy devices such as Versatek Plotters

  -  new super cheap InkJet Printers
     The host system needs to do conversion to raster file
  -  Dirty Little Secret - some of these understand PCL Level 5
     (monochrome) and are compatible with HP LaserJet 4.
```

You should try and see if your printer understands PCL. Try using GhostScript with the `hpdj`, `ljet3` or `ljet4`.

Figure 4-17. GhostScript To The Rescue

```
h110: {64} % gs --help
AFPL Ghostscript 6.50 (2000-12-02)
Copyright (C) 2000 Aladdin Enterprises, Menlo Park, CA.  All rights reserved.
Usage: gs [switches] [file1.ps file2.ps ...]
Most frequently used switches: (you can use # in place of =)
 -dNOPAUSE           no pause after page   | -q       'quiet', fewer messages
 -g<width>x<height>  page size in pixels   | -r<res>  pixels/inch resolution
 -sDEVICE=<devname>  select device         | -dBATCH  exit after last file
 -sOutputFile=<file> select output file: - for stdout, |command for pipe,
                                         embed %d or %ld for page #
Input formats: PostScript PostScriptLevel1 PostScriptLevel2 PDF
```

You can read PostScript level 1, 2, or PDF with this version of GhostScript.

Figure 4-18. GhostScript Devices

```
Available devices:
   x11 bbox x11alpha x11cmyk x11cmyk2 x11cmyk4 x11cmyk8 x11gray2 x11gray4
   x11mono x11rg16x x11rg32x atx23 atx24 atx38 deskjet djet500 fs600
   laserjet ljetplus ljet2p ljet3 ljet3d ljet4 ljet4d lp2563 oce9050 lj5mono
   lj5gray epswrite pswrite pdfwrite pxlmono pxlcolor bit bitrgb bitcmyk
   bmpmono bmpgray bmpsep1 bmpsep8 bmp16 bmp256 bmp16m bmp32b cgmmono cgm8
   cgm24 jpeg jpeggray miff24 pcxmono pcxgray pcx16 pcx256 pcx24b pcxcmyk
   pcx2up pbm pbmraw pgm pgmraw pgnm pgnmraw ppm ppmraw pnm pnmraw pkm
   pkmraw pksm pksmraw plan9bm pngmono pnggray png16 png256 png16m psmono
   psgray psrgb faxg3 faxg32d faxg4 tiffcrle tiffg3 tiffg32d tiffg4 tifflzw
   tiffpack tiff12nc tiff24nc appledmp iwhi iwlo iwlq bj10e bj200 ccr
   cdeskjet cdjcolor cdjmono cdj500 cdj550 declj250 dnj650c lj4dith pj pjxl
   pjxl300 bjc600 bjc800 escp djet500c cljet5 cljet5pr cljet5c lj3100sw
   coslw2p coslwxl cp50 epson eps9mid eps9high ibmpro epsonc ap3250 st800
   stcolor uniprint lj250 paintjet pjetxl hl7x0 imagen jetp3852 lbp8 lips3
   lp8000 m8510 necp6 lq850 lxm5700m oki182 okiibm photoex sj48 t4693d2
   t4693d4 t4693d8 tek4696 cfax dfaxlow dfaxhigh cif inferno mgrmono
   mgrgray2 mgrgray4 mgrgray8 mgr4 mgr8 sgirgb sunhmono cdj850 hpdj pcl3
   hpdjplus hpdjportable hpdj310 hpdj320 hpdj340 hpdj400 hpdj500 hpdj500c
   hpdj510 hpdj520 hpdj540 hpdj550c hpdj560c hpdj600 hpdj660c hpdj670c
   hpdj680c hpdj690c hpdj850c hpdj855c hpdj870c hpdj890c hpdj1120c cdj970
   stp nullpage
```

GhostScript converts PostScript to a wide range of output device formats. The interesting ones are `ljet4`, `lj5mono`, `hpdj`, and so forth. These are Ink Jet printers with various strange behaviors.

Figure 4-19. GhostScript Support

```
http://www.ghostscript.com
http://www.cs.wisc.edu/~ghost
http://www.cs.wisc.edu/~ghost/doc/printer.htm
http://www.cs.wisc.edu/~ghost/doc/AFPL/devices.htm
```

The http://www.ghostscript.com site has links to just about everything concerned with GhostScript. the http://www.cs.wisc.edu/~ghost site mirrors much of this information. The printer.htm (http://www.cs.wisc.edu/~ghost/doc/printer.htm) and devices.htm (http://www.cs.wisc.edu/~ghost/doc/AFPL/devices.htm) are good sources for information about printing.

4.6. Printing Test Pages

Figure 4-20. Printing Test Pages To Parallel Port

```
#!/bin/sh
for i in one.pcl one.pjl one.ps ; do
 cat $i >/dev/lp0
done
```

The easiest way to print the test pages is to try them all. This is brutal, but you may need to do it at least once.

Figure 4-21. Using Netcat (nc)

```
nc -  Netcat by Mudge
http://www.avian.org/
ftp://ftp.lprng.com/pub/LPRng/TOOLS/netcat
#!/bin/sh
for i in one.pcl one.pjl one.ps ; do
 nc -w10 10.0.0.14 9100  <$i
done

h110: {453} % sh -x /tmp/testnc
+ nc -w10 -v -v 10.0.0.14 9100
h14.private [10.0.0.14] 9100 (jetdirect) open
@PJL USTATUS DEVICE
CODE=10003
DISPLAY="02 WARMING UP"
ONLINE=TRUE

...
@PJL USTATUS TIMED
CODE=10001
DISPLAY="Done: papowell /"
```

```
ONLINE=TRUE

^C
```

Netcat is a handy tool for testing network connections to a printer. You can also use it as a port mapper and find out what interesting ports are open on your print spooler box.

Chapter 5. Filters

Figure 5-1. Filters

A filter is responsible for converting the job data files to a format compatible with the printer, transfering the job to the printer, and monitoring for any problems.

Figure 5-2. Filter Specification in Printcap Entry

```
# LPRng
lp:
  :filter=/.../filter

# Legacy BSD (LPRng is backwards compatible)
lp:
  # file 'format' is lower case letter X, filter is
  # 'Xf' option value, default format is 'f' so default
  # filter is 'if'
  :if=/.../filter
  :hf=/.../filter
```

The legacy BSD printing system required you to specify a filter for all input types. LPRng uses `:filter` to specify a default filter. Much more in line with modern printing.

Figure 5-3. Specifying Job Datafile Format

```
LPRng 'format' selection:

   h110: {295} % lpr -Fx /tmp/hi

Legacy BSD 'format' selection:

h110: {295} % lpr -x /tmp/hi

Format 'b' (Binary) or 'l' (Literal)
 for 'Passthrough' Operation - format 'l' is used

h110: {295} % lpr -l /tmp/hi
h110: {295} % lpr -b /tmp/hi

Control file example:
    Hh110.private
    J/tmp/hi
    Lpapowell
    N/tmp/hi
    fdfA383h110.private  <- first letter is format
    UdfA383h110.private
```

The **lpr** `-Fx` (*Filter* `x`) option allows you to specify the filter type. Which, of course, if you use the `:filter` option is ignored. The Binary or Literal (`-b` or `-l` requests *Pass Through* treatment from the filter. The filter is still used, but it is passed a special flag.

In the control file, lines starting with lower case letters specify a format and the data file to print with the format.

Figure 5-4. Filter Execution Environment

```
lp:sd=/var/spool/lpd/%P
  :filter=/filter
  :lp=/dev/lp

Execution:
  CWD is spool directory (/var/spool/lpd/lp)

Environment:
  PATH=...                - from /etc/lpd.conf
  LD_LIBRARY_PATH=...     - from /etc/lpd.conf
  PRINTER=lp
  PRINTCAP_ENTRY=lp:        - printcap entry
    :sd=/var/spool/lpd/lp     with %P fixed up
    :filter=/filter
    :lp=/dev/lp
  CONTROL=Aroot@h110+383    - job control file
    CA
    D2001-10-19-06:40:59.968
    Hh110.private
    J/tmp/hi
    Lroot
    Proot
    Qlp
    N/tmp/hi
    fdfA383h110.private
    UdfA383h110.private
```

The `PRINTCAP_PATH` environment variable has new lines before every colon (`:`) so you can split it up easily in the filter. See Figure 3-14 for an example of this use. The `CONTROL` value is the job control file. The control file contains the job print request sent to **lpd**. The output device is opened `Read-Write` if the `:rw` flag is set and it is a real device. Also, if the output is a filter or network connection then then the output is `Read-Write`.

Figure 5-5. Command Line Options

```
lp:sd=/var/spool/lpd/%P
  :filter=/filter
  :lp=/dev/lp

/filter <dfA383h110.private >/dev/lp
     STDIN, STDOUT, STDERR to Filter_status
```

```
-CA -D2001-10-19-06:40:59.968 -Hh110.private -J/tmp/hi -Lroot -Qlp
     From the control file

-Plp -Ff
 Legacy and LPRng, -P printer, -F format

-n root -h h110.private -f dfA383h110.private
   ...
 there are more lower case options than you want to think about
```

The filter command line options are really agressive due to history and feeping creaturism. All of the lines in the control file with a capital letter are passed as shown, the `-F` is used for the print job format, and the `-c` is set if the job format was `l` (Binary or Literal). The `-f` also is the name of the data file. `STDIN` is set to the data file and `STDOUT` to the output device or network connection. Just to make life interesting, the name of the accounting file (if it is specified in the printcap or if it has a default value) is passed as the last parameter.

Figure 5-6. Filter Exit Codes

```
Exit Code                Action
0 (JSUCC)                Successful, send filter output to printer
1 (JFAIL)                Failed, retry later
2 (JABORT)               Failed, do not retry, and Abort printing
3 (JREMOVE)              Remove job
4 (JHOLD)                Set job HOLD flag
```

The filter program exit codes can be used to control how the job is processed. The `JSUCC` (0) value is the normal successful exit code. The `JFAIL` (1) value is used to indicate some sort of temporary failure and the job should be retried again. The `JABORT` (2) is more serious, and indicates some system error. The job should not be retried and printing should stop. The `JREMOVE` (3) code simply removes the job. This is useful if the job is unprintable. Finally, the `JHOLD` sets the job `HOLD` flag. The job will not be released for printing until the **lpc** `release` command releases it.

Figure 5-7. Solid As A Rock Filter Operation

```
Filter:
  - examines input format using file
  - decides if file format is compatible with printer
      if not, can run a conversion program to convert
      the output.
  - initializes printer by sending magic cookies to it
      magic cookies depend on particular device, model, etc.
  - transfers output to printer, optionally inserting various
      control codes, CR -> CR/LF
  - if printer can reports status, then gets status as it does
      the transfer operation.
  - after transferring job,  sends more magic cookies to tell
      printer that job is over
  - monitors printer for error status
```

```
  - exits with an appropriate error code telling exactly what
     problems (if any) were encountered.
```

This is what a real filter should do. Note that it appears to be obvious that you would need to do all this.

Figure 5-8. Solid As A Used Paper Coffee Filter Operation

```
Filter:
 - Tosses job at GhostScript for conversion, sets
      GhostScript output to STDOUT
 - Returns GhostScript exit status
```

OK, I am being a bit harsh. But this is not too far from the truth. Most filter packages are somewhere between the two extremes.

5.1. Writing Your Own Filter

If you want to write your own filter you can start with the following simple examples. In practice you have two choices: **Perl** or **sh**. The first in a filter is to get the various environment and option values. We will write a simple filter that converts PostScript files into 4 up PostScript files.

Figure 5-9. Filter Template in perl

```
#!/usr/bin/perl
use Getopt::Std;
my $debug = 0;    # always... sigh...
my(%opt, @pc, %options);

# get command line options
getopts( 'A:B:C:D:E:F:G:H:I:J:K:L:M:N:O:P:Q:R:T:S:U:V:W:X:Y:Z:'
. 'a:b:cd:e:f:g:h:i:j:k:l:m:n:o:p:q:r:t:s:u:v:w:x:y:z:', \%opt );
while( @ARGV ){ $opt{acct} = pop @ARGV ; };

# split up the PRINTCAP_ENTRY environment variable value
@pc = split /\n\s*:/s, ($ENV{PRINTCAP_ENTRY} || "");
shift @pc;  # throw way first entry field, printer name
# set the options
foreach (@pc){ # set the options values
    if( /^(.+)=(.*)/ ){ $options{$1} = $2;
    } elsif ( /^(.+)@/ ){ $options{$1} = 0;
    } else { $options{$_} = 1; }
}

if( $debug ){ # for those interested
    my $s = "";
    foreach my $v (sort keys %options ){ $s .= "$v='$options{$v}',"; }
    print STDERR "Printcap: '$s'\n"; $s="";
    foreach my $v (sort keys %opt){ $s .= "$v='$opt{$v}',"; }
    print STDERR "Args: '$s'\n";
}
```

This example shows how to get the various environment variables and command line options and put them into handy *hashes* for easy access. You should note the special treatment of the `-c` option and the arguments at the end of the command line. The last argument is the name of the accounting file (if any).

Figure 5-10. How To Determine The Type of Job File

```
my $file = `/usr/bin/file -`; # we find the file type
chomp $file;
print STDERR "File: '$file'\n" if $debug; # show the file type
sysseek STDIN,0,0 or die "cannot seek STDIN - $!";      # rewind to start of file
my $is_postscript = ($file =~ /PostScript/i);
print STDERR "Postscript: '$is_postscript'\n" if $debug; # show the file type
if( $is_postscript ){
    my $status = system "/usr/local/bin/psnup", "-4";
    if( $status ){
        print STDERR "psnup failed - $!\n";
        exit 1;
    }
    exit 0;
}
while( <STDIN> ){ print };
exit 0;
```

To determine the file type we use the **file** application. This reads the first part of the input file and then writes out the determined file type on its `STDOUT`. We check to see if the file is a PostScript file and then run the `psnup` command. If it is not, then we simply write copy `STDIN` to `STDOUT`.

Figure 5-11. Printcap for Filter

```
nup:force_localhost
  :filter=/usr/local/libexec/filters/nup
  :sd=/var/spool/lpd/%P
  :lp=lp@localhost

(Don't forget to run checkpc!)
```

We set make a printcap entry. Note the use of `force_localhost` to make sure that the print jobs are sent to the right print queue! The filter output will then be sent to `lp@localhost` for final printing.

Figure 5-12. Using Filter With $debug=1

```
 Status: processing 'dfA946h110.private', size 145, format 'f',
      IF filter 'nup' at 07:27:30.938
 Status: IF filter 'nup' filter msg - 'Printcap: 'cm='Class Test Printer 1',....
 Status: IF filter 'nup' filter msg - 'Args: 'A='papowell@h110+946',C='A',....
 Status: IF filter 'nup' filter msg - 'File: 'standard input: PostScript document'
      at 07:27:30.938
 Status: IF filter 'nup' filter msg - 'Postscript: '1" at 07:27:30.938
 Status: IF filter 'nup' filter msg - 'Wrote 0 pages, 1775 bytes' at 07:27:30.940
 Status: IF filter 'nup' filter finished at 07:27:30.941
```

```
Status: sending job 'papowell@h110+946' to lp@localhost at 07:27:30.943
```

Figure 5-12 shows the status output when we set the `$debug=1`. This is recommended when you are testing your filters.

Figure 5-13. Using Filter With $debug=0

```
Status: processing 'dfA021h110.private', size 145, format 'f',
  IF filter 'nup' at 07:38:22.416
Status: IF filter 'nup' filter msg - 'Wrote 0 pages, 1775 bytes'
  at 07:38:22.472
Status: IF filter 'nup' filter finished at 07:38:22.473
Status: sending job 'papowell@h110+21' to t6@localhost at 07:38:22.475
```

Figure 5-13 shows the status output when we set the `$debug=0`. As you can see, it is less chatty and just as informative to most users.

5.2. The LPRng IFHP Filter

Figure 5-14. ifhp

```
ifhp   (IFHP)
  part of the LPRng suite
  separate from LPRng
  not quite as strong as a brick,
    but better than a wet paper coffee filter.

  ifhp.conf contains printer configuration information
```

The **ifhp** filter is part of the LPRng family of programs. It is distributed separately because the release and update times did not orginally match. The **ifhp** filter is intended for use with the **LPRng** software and undergoes much of the same testing.

Figure 5-15. ifhp.conf Configuration Information

```
###   Supported Printers

### default - HP 4M Plus, PostScript, PJL, PCL, status, pagecount support
### apple - PostScript printer, text to PS conversion, status, pagecount support
### postscript - PostScript printer, text to PS conversion, status, pagecount support
### ps - PostScript printer, text to PS conversion, status, pagecount support
### pcl - PCL only printer, no status
### pcl_gs - HP Laserjet 4 PCL only printer, write only, no status
### hpiiisi - HP LaserJet III (PCL and PostScript Interpreter)
```

Each printer type has an entry in the `ifhp.conf` configuration file. For convenience these are put at the start of the file.

Figure 5-16. Default Printer Magic Cookies

```
# magic cookie definitions
[default]
# printer capabilities
pjl    # can do PJL
pcl    # can do PCL 5
ps     # can do PS
text   # can do TEXT

status  # returns status by default
sync    # needs sync magic cookie sent
ps_sync=
  serverdict begin 0 exitserver
  statusdict begin false setenginesync end
        # PostScript sync magic cookie definition

# definition of available user options
pjl_user_opts=[ ... simplex duplex ... ]

# magic cookie strings for use when PJL, PostScript or PCL file
pjl_duplex=@PJL SET DUPLEX = ON
ps_duplex=   statusdict begin true setduplexmode false settumble end
pcl_duplex=\033&l1S
```

Each printer has a configuration section where the printer capabilities are defined, the user options that are available are specified, and the magic cookies that need to be sent to the printer to have the operations happen are defined. The `default` entry species the set of defaults for all the printers.

Figure 5-17. PostScript Only Printer

```
a2ps_converter= /usr/local/bin/a2ps \%s{a2ps_options}
a2ps_options= -q -B -1 -M \%M{papersize} --borders=no -o-
gzip_decompress = /usr/bin/gzip -c -d

# model for 'apple', 'postscript' or 'ps'
[ apple postscript ps ]
pjl@
pcl@
ps
text@
file_output_match = [
  *postscript*       ps
  *text*             ps  \%s{a2ps_converter}
  *pdf*              ps  \%s{pdf2ps_converter}
  *gzip_compressed*  filter  \%s{gzip_decompress}
  ]

# do {
#   $file = (lc ` file - `) =~ s/[\s\n]/_/gs;
#   foreach $line (@file_output_match) {
#     last if globmatch( $file, $line->[0] );
#   }
```

```
#   if( $line->[2] ){
#      run $file->[2] and convert input file to format
#   }
# } while $line and $line->[1] != "filter"
# outfile file format is $line->[1]
```

Here is an example of a PostScript only printer. The `pjl@` `pcl@` and `text@` entries turn off PJL, PCL, and TEXT for the printer.

The `file_output_match` entry is used to implement a simple conversion facility that will try to find a conversion from one file type to another. It is deliberately simple minded, on the grounds that if you have a special type that you need to do conversions for all the time then you better make sure you do it right.

Figure 5-18. Using the ifhp Filter

```
Printcap:

lp:sd=/var/spool/lpd/%P
  :filter=/usr/local/lib/filters/ifhp
  :lp=/dev/lp
  # a PostScript printer that does not return status
  :ifhp= model=ps,status@
```

The `:ifhp=` option is used to pass options to ifhp. You can also use `ifhp -Toption` as well. In this example we specify a PostScript printer that does not return status.

Figure 5-19. Example of ifhp Operation

```
h110: {205} %  lpr /tmp/f.pdf
h110: {205} %  lpq -L
 Filter_status: using model 'DEFAULT' at 09:36:36.475
 Filter_status: pagecount using 'pjl info pagecount' at 09:36:36.477
 Filter_status: setting up printer at 09:36:36.477
 Filter_status: getting sync using 'pjl echo' at 09:36:36.477
 Filter_status: sync done at 09:36:38.335
 Filter_status: pagecounter 105340 after 1 attempts at 09:36:38.349
 Filter_status: pagecounter 105340 at 09:36:38.349
 Filter_status: sending job file at 09:36:38.350
 Filter_status: starting transfer at 09:36:38.350
 Filter_status: file program = '/usr/bin/file -' at 09:36:38.350
 Filter_status: started FILE_UTIL- 'file' at 09:36:38.351
 Filter_status: file information = 'pdf_document,_version_1.2' at 09:36:38.415
 Filter_status: initial job type 'pdf_document,_version_1.2' at 09:36:38.415
 Filter_status: decoded job type 'POSTSCRIPT' at 09:36:38.415
 Filter_status: job type 'POSTSCRIPT', converter '/usr/local/bin/pdf2ps - -'
     at 09:36:38.415
 Filter_status: started CONVERTER- 'pdf2ps' at 09:36:38.416
 Filter_status: converter done, output 707742 bytes at 09:36:39.589
 Filter_status: transferring 707742 bytes at 09:36:39.590
 Filter_status: 26 percent done at 09:36:40.338
 Filter_status: 52 percent done at 09:36:41.082
```

```
 Filter_status: 78 percent done at 09:36:41.830
 Filter_status: data sent at 09:36:44.501
 Filter_status: sent job file at 09:36:44.501
 Filter_status: getting end using 'pjl job/eoj' at 09:36:44.501
 Filter_status: end of job detected at 09:43:50.268
 Filter_status: pagecounter 105359 after 1 attempts at 09:43:51.503
 Filter_status: pagecounter 105359, pages 19 at 09:43:51.504
 Filter_status: done at 09:43:51.504
```

As you can see the information produced by the **ifhp** filter is more than adequate for tracing its steps. You might want to try adding `:ifhp=debug=1`, `:ifhp=debug=2`, or even for the customary debugging information.

Figure 5-20. Using -Z to Pass Options to ifhp

```
h110: {227} % lpr -Zlandscape,duplex,copies=3 /tmp/hi

Standard ifhp Options:

Paper/Media Selection:
  a3, a4, a5, ledger, legal, letter
  envelope, oversize, transparency
  mediaselect=N

Input Selection:
 inlower, inupper, manual

Output Selection:
  outlower, outupper

Copies:
  copies=N

Orientation:
  landscape, portrait

Duplex:
  duplex, duplexshort, simplex, lduplex, sduplex
```

Job formatting options are passed to `ifhp` using the **lpr** `-Z`. These are put into the control file with the -Z option.

Figure 5-21. Testing ifhp Operations

```
#!/bin/sh
# sendhp.sh
cp /dev/null /tmp/log
cp /dev/null /tmp/out
IP=10.0.0.14
ifhp=/usr/libexec/filters/ifhp
# $ifhp -Tdev=$IP%9100,trace,debug=4 </tmp/one.ps 2>&1 | tee /tmp/log
# $ifhp -Tdev=$IP%9100,trace,debug=1,appsocket,status,pagecount,waitend </tmp/one.ps 2>
```

```
# $ifhp -Tdev=$IP%9100,trace,debug=1,pagecount_poll=2 </tmp/one.ps 2>&1 | tee /tmp/log
$ifhp -Tdev=/tmp/out,trace,model=hp5 </tmp/one.ps 2>&1 | tee /tmp/log

h110: {475} % sh /tmp/sendhp.sh
ifhp 06:48:04.430 [3438] main: using model 'hp5'
ifhp 06:48:04.433 [3438] Process_job: setting up printer
ifhp 06:48:04.433 [3438] Do_accounting: pagecounter 0
ifhp 06:48:04.434 [3438] Process_job: sending job file
ifhp 06:48:04.434 [3438] Send_job: starting transfer
ifhp 06:48:04.434 [3438] Send_job: initial job type 'POSTSCRIPT'
ifhp 06:48:04.434 [3438] Send_job: decoded job type 'POSTSCRIPT'
ifhp 06:48:04.434 [3438] Send_job: job type 'POSTSCRIPT'
ifhp 06:48:04.434 [3438] Send_job: transferring 145 bytes
ifhp 06:48:04.434 [3438] Send_job: 100 percent done
ifhp 06:48:04.434 [3438] Send_job: data sent
ifhp 06:48:04.434 [3438] Process_job: sent job file
ifhp 06:48:04.434 [3438] Do_accounting: pagecounter 0, pages 0
ifhp 06:48:04.434 [3438] Process_job: done

h110: {475} % more /tmp/out
^[%-12345X@PJL
@PJL RDYMSG DISPLAY = ":"
@PJL USTATUSOFF
@PJL USTATUS JOB = ON
...
```

You can test **ifhp** and see what it does by using the `-T` command line option. This is equivalent to using the `/etc/printcap` `ifhp` option.

5.3. Taming the Wild Phaser Printer

There are several printers that have network interfaces but which require very special treatment. Among these printers are the Tektronics `Phaser` printers, some legacy Xerox printers, and some plotters. These devices require that the network connection be opened and closed multiple times when sending a job. In order to handle this we have the *filter* open the connection. This type of operations is called the `appsocket` protocol.

Figure 5-22. Phaser/Appsocket Support

```
Printcap:
lp:
  :lp=/dev/null
  :filter=/.../ifhp
  :ifhp=model=phaser  # OR
  :ifhp=appsocket,status,pagecount,waitend,dev=10.0.0.14%9100

Offline Test:

IP=10.0.0.14
ifhp -Tdev=trace,debug=1,appsocket,status,pagecount,waitend,dev=10.0.0.14%9100
```

```
</tmp/one.ps 2>&1 | tee /tmp/log
```

You need to specify the remote host and port to use to the `ifhp` filter, as well as the `appsocket` option. You should test this first using the offline test mode.

Chapter 6. Banner Pages and Accounting

Banner pages are usually a waste of paper unless you need to make sure that user jobs are separated clearly. Even then, unless banner pages are on different stock or color they are usually ignored and thrown away.

6.1. Suppressing Banner Pages

Most users do not *want* banner pages, as they are a waste of paper. Some printers, especially the HP family of printers, will generate a banner page when you send a job to them using the `lpd` protocol (i.e. `lp=port@host`.

Figure 6-1. Changing JetDirect Configuration

```
h110: {492} % telnet 10.0.0.14
Trying 10.0.0.14...
Connected to h14.private.
Escape character is '^]'.

Please type [Return] two times, to initialize telnet configuration
For HELP type "?"
> ?

===JetDirect Telnet Configuration===

        Configured Parameters
        IP Address      : 10.0.0.14
        Subnet Mask     : 255.255.255.0
        Default Gateway : 10.0.0.1
        Syslog Server   : 0.0.0.0
        Idle Timeout    : 121 Seconds
        Banner          : 1
> banner: 0
> quit
```

Your first line of defense is to try to disable banner printing by the printer. This can be done (for HP Printers) as in Figure 6-1. Note that the user name and password are not set by default so effectively anybody can modify your printer configuration.

Figure 6-2. Printcap Option `:sh` and lpr -h (No Header) Option

```
Printcap:
  lp: ... :sh

Command line:
  h110: {838} % lpr -h /tmp/hi

No 'L' line in control file
```

The banner printing is triggered by the `L` (Login name?) line in the control file. You can use the printcap `:sh` (suppress header pages or banner pages) or the command line **lpr** `-h` option to prevent **lpr** from putting this line into the control file.

Figure 6-3. Removing Banner Lines

```
Printcap:
lp:...
:incoming_control_filter=/.../nobanner


nobanner Script:

#!/usr/bin/perl
...
See Figure 5-9

  # read stdin
  my( $file );
  $file = join "", <STDIN>;
  $file =~ s/^L.*$//m;
  print $file;
  exit 0
```

6.2. Forcing Banner Pages

The `:ab` (always print a banner page) is used by the **lpd** server to force banner page generation. Even if the user tries to suppress it, it will still try to print a banner page.

Figure 6-4. Forcing Banner Pages

```
lp:...

lp:server
  :ab   # force a banner page on printing
```

6.3. Generating Banner Pages

Figure 6-5. Generating Banner Page

```
lp:
  :of=/.../ifhp
  :bp=/.../banner.ps  # for banner at start
  # :be=/.../banner.ps  # for banner at end
  # :bs=/.../banner.ps  # for banner at start
```

```
LPRng banner generators:
  /usr/local/libexec/filters/psbanner - PostScript
  /usr/local/libexec/filters/pclbanner - PCL
  /usr/local/libexec/filters/lpbanner - Text
```

If you want to have a banner page printed you need to have two additional **lpd** facilities in the printcap entry: a banner printing program (`:bp=...`) and a filter to handle banner printing (`:of=...`). The `bp` causes the banner to be put at the start of the job, the `be` at the end of the job (overrides `bp`), and you can use `bs` and `be` to have banners at both start and end of jobs.

The banner printing programs are run exactly as a normal filter program, and the output is used as the banner to be printed. The **LPRng psbanner**, **pclbanner**, and **lpbanner** programs can be modified for local use.

If your printer requires special setup or conditioning, then you will have to specify a filter for the banner program. Historically this is done using the `of` option. This filter is started, the banner page sent to it, and then the filter is suspended (don't ask), the job is printed, and then the filter is restarted. Finally, if a banner is needed at the end of the job it is generated and sent.

6.4. Accounting

For a detailed discussion of accounting, please consult the **LPRng** HOWTO documentation. We will briefly cover some simple recipes for disaster here.

Figure 6-6. Basic Accounting Information

```
lp:
  :af=acct    # accounting file
    or
      :af=|/...       # filter to run
      :af=host%port   # remote server to query
  :as=jobstart $H $n $P $k $b $t   # line to print
  :as=/...    # filter to run at start of job
  :ae=jobend $H $n $P $k $b $t   # line to print
  :ae=/...    # filter to run at start of job

  :achk       # check to see if allowed to print
```

The `:af` entry specifies either a file, a network connection, or a program to run. If a file, then accounting information is written to the file; if a program, then the program is run; if a network connection then a TCP/IP connection is made to the specified host and port. The `:as` and `:ae` entries specify the format of the line to print or a program to run at the start and end of the job respectively.

Figure 6-7. Accounting File Information

```
jobstart '-Hh110.private' '-npapowell' '-Pt1' '-kcfT456h110.private'
   '-b3' '-t2001-10-21-15:17:12.000'
jobend '-Hh110.private' '-npapowell' '-Pt1' '-kcfT456h110.private'
    '-b3' '-t2001-10-21-15:17:
```

The accounting information provided by the **lpd** server is very basic and does not include page usage. However, we can have the print filters write information to the file as well.

Figure 6-8. Filter Accounting Information

```
jobstart '-Hh110.private' '-nroot' '-Plp' '-kcfA129h110.private'
   '-b48780' '-t2001-10-19-09:36:36.000'
filestart '-q26132' '-p105340' '-t2001-10-19-09:36:38.350'
    '-Aroot@h110+129' '-nroot' '-Plp'
fileend '-b19' '-T435' '-q26132' '-p105359' '-t2001-10-19-09:43:51.504'
     '-Aroot@h110+129' '-nroot' '-Plp'
jobend '-Hh110.private' '-nroot' '-Plp' '-kcfA129h110.private' '-b48780' '-t2001-10-19-0
```

The `filestart` and `fileend` lines were written by the **ifhp** filter. The `-p` (pagecounter) values are the starting and ending values for the physical page counter on the printer. The `-b` value is the number of pages used and the `-T` the number of seconds used.

Remember that **ifhp** can only get accurate page counting information if there is a physical page counter and it can be accurately read. This requires a bidirectional network link. Parallel ports *do not work*. Also, your printer must support either PJL or PostScript, and have a hardware page counter. Finally, the page counter must be updated in a timely manner and reflect the number of pages used by each job.

The `:achk` checks to see if the user has permission to print. At the start of the job, if the accounting destination is a program or network connection, after writing the information **lpd** reads a line from program or connection. This line is used to determine if the user has permission to print. The return value can also cause the job to be held or deleted.

6.5. Accounting Gotchas

Figure 6-9. Accounting Gotchas

```
jobstart '-Hh110.private' '-nroot' '-Plp' '-kcfA129h110.private'
   '-b48780' '-t2001-10-19-09:36:36.000'
filestart '-q26132' '-p105340' '-t2001-10-19-09:36:38.350'
    '-Aroot@h110+129' '-nroot' '-Plp'
jobstart '-Hh110.private' '-nroot' '-Plp' '-kcfA129h110.private'
   '-b49780' '-t2001-10-19-09:36:36.000'
filestart '-q27992' '-p105340' '-t2001-10-19-09:36:38.350'
    '-Aroot@h110+129' '-nroot' '-Plp'
```

Observe the accounting file in Figure 7-1. Clearly something has happened. The clever student (ummm... user?) has killed off the printer just as his last page has come out. There is no usage line. You will have to calculate usage based on the differences between the pagecounters at the start of each job.

Of course, this can also be the result of a printer failure, bad print job, etc. etc. etc. Not to mention elves. Most student labs have lots of elves lurking in the background that cause endless headaches.

6.6. Accounting Including Banner Pages

Figure 6-10. Accounting Using Banner Pages

```
lp:
  :of=/.../ifhp
  :...
```

The `:of` filter is used to print the banner pages. Now the information in the accounting file inclues the banner pages as well as the job pages.

Chapter 7. Printer Pools and Load Sharing

Figure 7-1. Printer Pools and Load Sharing

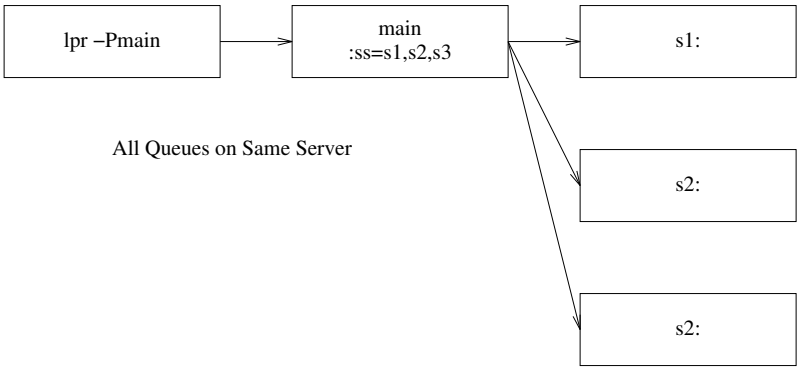

A printer pool does load sharing amoung a group of printers. When you send a job to the main spool queue the job is then sent to the next available printer. If all of the printers are busy then the job is held in the queue Figure 7-1.

Figure 7-2. Load Balancing Printcap

```
main:
  :sd=/var/spool/lpd/%P:sv=sv1,sv2,sv3

sv1:
  :sd=/var/spool/lpd/%P:ss=main:lp=...
sv2:
  :sd=/var/spool/lpd/%P:ss=main:lp=...
sv3:
  :sd=/var/spool/lpd/%P:ss=main:lp=...
```

The printcap for setting up spooling is shown in Figure 7-2. The `:sv` option marks this queue as the input queue for load balancing and the `:ss` option specifies that this queue is the destination for load balancing. The server queues must have an associated device and send the jobs to the associated device.

Figure 7-3. Load Balancing to Remote Queues

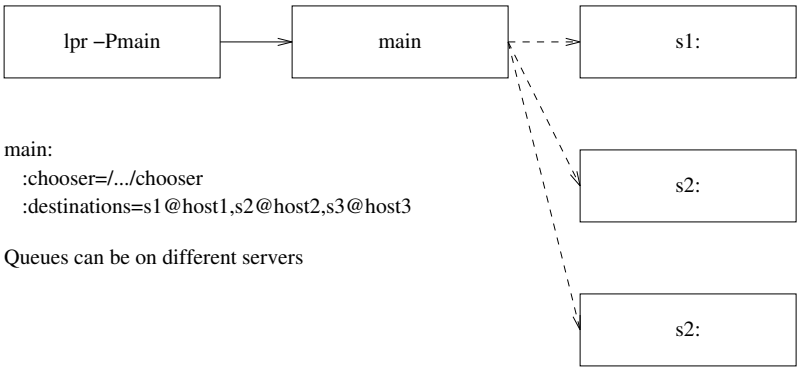

Figure 7-4. Printcap for Chooser

```
main:
  # program to select destination
  :chooser=/.../chooser
  :destinations=s1@host1,s2@host2,s3@host3
  # You can even combine the two forms
  #  sv=...
```

The `:chooser` value is an executable program that is provided a list of destinations, by using the `:destinations` value in the `$PRINTCAP_ENTRY`. We will show how to use this in the next section.

7.1. Implementing Smart Load Balancing

Figure 7-5. Chooser Program Operation

```
# In Perlish
@list = PC('destination');  # get destination list
foreach $printer (@list) {
    if( PrinterAvailable( $printer ){
        print $printer . "\n";
        last;
    }
}
```

The `PrinterAvailable` function would determine the availability of the destination printer by an appropriate method - **lpq** query, testing to see if a connection can be made to the device, etc.

If you specify a `:chooser` for a `:sv` type of load balance queue, then the chooser program can also be used. Lets look at a simple `chooser` implementation.

Figure 7-6. Filter Template in Perl

```
#!/usr/bin/perl
use Getopt::Std;
```

```
my $debug = 1;    # always... sigh...
my(%opt, @pc, %options);

# get command line options
getopts( 'A:B:C:D:E:F:G:H:I:J:K:L:M:N:O:P:Q:R:T:S:U:V:W:X:Y:Z:'
. 'a:b:cd:e:f:g:h:i:j:k:l:m:n:o:p:q:r:t:s:u:v:w:x:y:z:', \%opt );
while( @ARGV ){ $opt{acct} = pop @ARGV ; };

# split up the PRINTCAP_ENTRY environment variable value
@pc = split /\n\s*:/s, ($ENV{PRINTCAP_ENTRY} || "");
shift @pc;  # throw way first entry field, printer name
# set the options
foreach (@pc){ # set the options values
    if( /^(.+)=(.*)/ ){ $options{$1} = $2;
    } elsif ( /^(.+)@/ ){ $options{$1} = 0;
    } else { $options{$_} = 1; }
}

if( $debug ){ # for those interested
    my $s = "";
    foreach my $v (sort keys %options ){ $s .= "$v='$options{$v}',"; }
    print STDERR "Printcap: '$s'\n";
    $s="";
    foreach my $v (sort keys %opt){ $s .= "$v='$opt{$v}',"; }
    print STDERR "Args: '$s'\n";
}
```

This is the standard filter template. We use this almost everywhere.

Figure 7-7. Choosing A Destintation

```
my (@list, @destinations);
if( $options{sv} ){ # if we have :sv then we read them from STDIN
    while( <STDIN> ){ chomp; push @destinations, $_; }
} else { # else we use the 'destinations' printcap value
    @list = split /[,\s]+/, ($options{destinations} || "");
    # and we randomize - this is a bit of perl magic
    while( @list ){
        push @destinations,(splice @list,rand(@list),1);
    }
}
# and we split the destinations up...
print STDERR "Destinations '@destinations'\n" if $debug;
# and now we search
my $lpq="/usr/bin/lpq";
foreach ( @destinations ){
    my $status = "";
    next if not $_;
    # run the lpq
    eval { alarm(10); $status = `$lpq -s -P$_`; }; alarm(0);
    chomp $status;
    print STDERR "STATUS '$_' $status\n" if $debug;;
```

```
        # we reject queues that are not suitable
        next if( $status =~ /disabled/ or $status != / 0 jobs / );
        print STDERR "chose '$_' from @$destinations\n";
        print $_;
        last;
    }
```

We first get the list of destinations - from `STDIN` if we have helping an `:sv` load balance queue, or from the `:destinations` printcap entry. In the later case we randomize the list so that we spread the load over different printers rather than sending to the first printer in the list. We then run a command or application that gets the print queue status or whatever we need to decide if the printer is ready. Notice the timeouts. This is usually not necessary but you might run into this problem some day. We then look at the status and decide if we can use the printer.

If no printer is available then nothing is printed on `STDOUT`, and the **lpd** process will wait until either a printer becomes available or for a timeout specified by the `:chooser_interval` value (default 10 seconds) in the printcap entry or `/etc/lpd.conf` file.

7.2. Using `:chooser` Exit Codes

Figure 7-8. Chooser Exit Codes

```
Exit Code                Action
0 (JSUCC)                Use chooser output for destination
                         (No destination, retry later)
1 (JFAIL)                Failed - retry later
                         (same as JSUCC, no destination)
2 (JABORT)               Abort printing, wait for restart
3 (JREMOVE)              Remove job
4 (JHOLD)                Set job HOLD flag
```

The `:chooser` program exit codes can be used to control printing. The `JHOLD` and `JREMOVE` exit codes are job specific; they can be used to hold or remove a job.

Chapter 8. Wildcards, Bounce Queues, and Forwarding

One of the things you might want to do is have a set of queues that massage the various jobs and then send them to a destination printer.

Figure 8-1. Evil (BAD) Way

```
landscape:force_localhost
  :ifhp=model=xx
  :filter=/.../convert_to_landscape | /.../ifhp
  :lp=10.0.0.14%9100

portrait:force_localhost
  :ifhp=model=xx
  :filter=/.../convert_to_landscape | /.../ifhp
  :lp=10.0.0.14%9100

lp:tc=.common
  :ifhp=model=xx
  :filter=/.../ifhp
  :lp=10.0.0.14%9100
```

Each queue will now fight for a connection to the destination printer.

8.1. Bounce Queues

Figure 8-2. Not So Evil Way

```
landscape:tc=.common
  :filter=/.../convert_to_landscape
  :lp=lp@localhost

portrait:tc=.common
  :filter=/.../convert_to_landscape
  :lp=lp@localhost

lp:tc=.common
  :ifhp=model=xx
  :filter=/.../ifhp
  :lp=10.0.0.14%9100
```

You have various filters set up so that each queue does a conversion and then forwards it to the real printer for output. No fighting. This method is called *bounce queues* as the job *bounces* through the *queues*, getting modified at each stage.

8.2. Adding -Z Options Using Bounce Queues

Figure 8-3. Add Options Using `:append_z`

```
landscape:tc=.common
  :append_z=landscape
  :lp=lp@localhost

portrait:tc=.common
  :append_z=portrait
  :lp=lp@localhost

# ifhp (or other) filter uses the -Z options
lp:tc=.common
  :ifhp=model=xx
  :filter=/.../ifhp
  :lp=10.0.0.14%9100
```

Now you can add one option at a time. But what if you want to do landscape and duplex mode at the same time? You need to create a `landscape_duplex` queue. The combinations become very unweildy.

8.3. Adding Options By Modifying Control File

Figure 8-4. Diabolically Fiendishly Clever Method

```
.common=force_localhost:sd=/var/spool/lpd/%P:sh:mx=0

lp|lp_*  # we recognize lp_xxxx for this filter
  :tc=.common
  :incoming_control_filter=/.../update_z
  :ifhp=model=xx
  :filter=/.../ifhp
  :lp=10.0.0.14%9100

-- for landscape:
h110: {838} % lpr -Plp_landscape
   -> Control file:  Zlandscape

-- for portrait
h110: {838} % lpr -Plp_portrait
   -> Control file:  Zlandscape

-- for landscape and duplex
h110: {838} % lpr -Plp_landscape_duplex -Zother
   -> Control file:  Zother,landscape,duplex
```

You can use a *wildcard* in the printer name. The **LPRng** code will first try to match a printer name against the non-wildcard printer names. If this fails then it will look for the first match using a *glob* type of match.

When the job is received the name that was used to send the job will be put into the control file as the `Q` line and is passed as a `-Q` option to and filters. The `:incoming_control_filter` is passed the original control file on its `STDIN` and sends a modified version on `STDOUT`. This allows the control file to be modified as it is received.

One of the ways to modify the control file is to convert suffixes of the print queue name (i.e. - `_option`) to `-Z` option values and append these to the `Z` line of the control file.

Figure 8-5. Using `update_z`

```
#!/usr/bin/perl
...
  See Figure 5-9

# read stdin
my( $file, $Zopts, $Q );
$file = join "", <STDIN>;
print STDERR "File '$file'\n" if $debug;

# first use command line Queue name, then control file Q
# then the printer name, then control file P
$Q = $opt{Q}; ($Q) = $file =~ /^Q(.*)$/m if not $Q;
# if no queue name fall back to printer name
$Q = $opt{P} if not $Q; ($Q) = $file =~ /^P(.*)$/m if not $Q;
$Q = "" if not $Q;  # stupid -w... sigh...

# get Zopts
($Zopts) = $file =~ /^Z(.*)$/m;
$Zopts = "" if not $Zopts; # stupid -w ... sigh ...

print STDERR "Q '$Q', Zopts '$Zopts'\n" if $debug;

# now we split up the name and use as parameters for Z options
while( $Q =~ /_([^_]+)/g ){
    # you can simply append them:
    $Zopts .= ",$1";
    # or you can test and then append translated format
    # $Zopts .= $xlate{$1} if $late{$1}
}
$Zopts =~ s/^,//; # remove leading comma
print "Final '$Zopts'\n" if $debug;
if( $Zopts ){
    $file = "Z$Zopts\n" . $file if( not ($file =~ s/^Z.*$/Z$Zopts/m));
}
print $file;
exit 0
```

The `-Q` option or control file `Q` line is used to get the name of the print queue. The suffixes are then processed in turn. You can either simply append them or have a hash translate these values.

Chapter 9. Form Support and Hold Queues

Sometimes jobs require a special setup on a printer, and jobs cannot be printed unless it is done. There are several ways to handle this.

9.1. Hold Queues

Figure 9-1. Hold Queues

```
.common=force_localhost:sd=/var/spool/lpd/%P:sh:mx=0

setup1:tc=.common
  :ah        # always hold incoming jobs
  :lp=lp@localhost
setup2:tc=.common
  :ah        # always hold incoming jobs
  :lp=lp@localhost
lp:tc=.common  # print queue
  :ifhp=model=xx
  :filter=/.../ifhp
  :lp=10.0.0.14%9100
```

Figure 9-2. All Hold Queues

```
h110: {853} % lpq -Psetup1
Printer: setup1@h110 (dest t1@localhost) (autohold)
 Queue: no printable jobs in queue
Printer: t1@h110 'Test Printer 1' (printing disabled)
 Queue: no printable jobs in queue
h110: {854} % lpr -Psetup1 /tmp/hi
h110: {855} % lpq -Psetup1
Printer: setup1@h110 (dest t1@localhost) (autohold)
 Queue: no printable jobs in queue
 Holding: 1 held jobs in queue
 Server: no server active
 Rank   Owner/ID                  Class Job Files                 Size Time
hold   papowell@h110+356            A   356 /tmp/hi                 3 15:02:50
Printer: t1@h110 'Test Printer 1' (printing disabled)
 Queue: no printable jobs in queue
```

When we print jobs to a `:ah` or always hold queue, the job is not processed until released. We can release one or all the jobs that are being held.

Figure 9-3. Releasing Jobs for Printing

```
h110: {856} % lpc release setup1 all
Printer: setup1@h110
setup1: selected 'papowell@h110+356'
```

```
setup1@h110.private: started
h110: {857} % lpq -Psetup1
Printer: setup1@h110 (dest t1@localhost) (autohold)
 Queue: no printable jobs in queue
 Status: job 'cfA356h110.private' removed at 15:03:49.053
Printer: t1@h110 'Test Printer 1' (printing disabled)
 Queue: 1 printable job
 Server: no server active
 Rank   Owner/ID                  Class Job Files                 Size Time
1      papowell@h110+356            A   356 /tmp/hi                 3 15:03:49
h110: {858} %
```

We can release the jobs which are then forwarded to the main queue for printing.

We can also set up *Time Release* queues using the `cron` time scheduling system.

Figure 9-4. Releasing Jobs For Scheduled Print Run

```
Printcap:
  nightrun:
    :ah        # always hold incoming jobs
    :lp=lp@localhost

Crontab Entry To Release Jobs:

#minute hour mday month wday    who command
1   3   *   *   *   root    /usr/sbin/lpc release nightrun all
```

You can also use the **LPRng** *class* facility. The **lpr** `-Cclass` option sets the `Cclass` line in the control file. You can then use the **lpc** `class` facility to select job classes to print.

Figure 9-5. Using Job Classes

```
h110: {870} % lpc class t1 top,middle
Printer: t1@h110
classes printed 'top,middle'
t1@h110.private: class updated
h110: {871} % lpq
Printer: t1@h110 'Test Printer 1' (classes top,middle)
 Queue: no printable jobs in queue
h110: {872} % lpr -Clow /tmp/a
h110: {873} % lpq
Printer: t1@h110 'Test Printer 1' (classes top,middle)
 Queue: no printable jobs in queue
 Holding: 1 held jobs in queue
 Server: no server active
 Rank   Owner/ID                  Class Job Files                 Size Time
holdclass papowell@h110+451         L   451 /tmp/a               38404 15:16:39
h110: {874} % lpr -Ctop /tmp/hi
h110: {875} % lpq
Printer: t1@h110 'Test Printer 1' (classes top,middle)
 Queue: no printable jobs in queue
 Holding: 1 held jobs in queue
```

```
 Server: no server active
 Status: job 'cfT456h110.private' removed at 15:17:12.932
 Rank   Owner/ID                  Class Job Files                 Size Time
holdclass papowell@h110+451         L   451 /tmp/a               38404 15:16:39
```

You can specify a current list of classes to be printed using the **lpc** `class` command. As shown in Figure 9-5. the jobs not in the current classes are held until explicitly released or until the class is changed. You can disable the job class facility by setting the class to `off`.

Figure 9-6. Setting New Job Classes and Disabling Job Classes

```
h110: {877} % lpc class t1 low
Printer: t1@h110
classes printed 'low'
t1@h110.private: class updated
h110: {879} % lpq -ll
Printer: t1@h110 'Test Printer 1' (classes low)
 Queue: no printable jobs in queue
 Status: finished 'papowell@h110+451', status 'JSUCC' at 15:22:03.178
 Status: subserver pid 84477 exit status 'JSUCC' at 15:22:03.179
 Status: t1@h110.private: job 'cfL451h110.private' printed at 15:22:03.180
 Status: job 'cfL451h110.private' removed at 15:22:03.181

h110: {39} % lpc class t1 off
Printer: t1@h110
all classes printed
t1@h110.private: class updated
h110: {40} % lpq
Printer: t1@h110 'Test Printer 1'
 Queue: no printable jobs in queue
 Status: job 'cfL451h110.private' removed at 15:22:03.181
```

You can also put a class value into the control file using the `incoming_control_filter` facility described in Section 8.3.

Figure 9-7. Modifying Control File Using update_class

```
lp|lp_*:tc=.common
  :incoming_control_filter=/.../update_class
  :ifhp=model=xx
  :filter=/.../ifhp
  :lp=10.0.0.14%9100
```

The `:incoming_control_filter` will now update the class to whatever you want.

Figure 9-8. The update_class Filter

```
#!/usr/bin/perl
...
  See Figure 5-9

# read stdin
```

```
my( $file, $Copts, $Q );
$file = join "", <STDIN>;
print STDERR "File '$file'\n" if $debug;

# first use command line Queue name, then control file Q
# then the printer name, then control file P
$Q = $opt{Q}; ($Q) = $file =~ /^Q(.*)$/m if not $Q;
# if no queue name fall back to printer name
$Q = $opt{P} if not $Q; ($Q) = $file =~ /^P(.*)$/m if not $Q;
$Q = "" if not $Q;  # stupid -w... sigh...

# get Copts
($Copts) = $file =~ /^C(.*)$/m;
$Copts = "" if not $Copts; # stupid -w ... sigh ...

print STDERR "Q '$Q', Copts '$Copts'\n" if $debug;

# now we split up the name and use as parameters for C option
while( $Q =~ /_([^_]+)/g ){
 $Copts = $1;
}
print "Final '$Copts'\n" if $debug;
if( $Copts ){
    $file = "C$Copts\n" . $file if( not ($file =~ s/^C.*$/C$Copts/m));
}
print $file;
exit 0
```

Chapter 10. Interfacing to Vintage, Legacy, and SunOS Print Spoolers

Some legacy, vintage, and other print spoolers do not meet the RFC1179 requirements, or accept only control files with options used by the original BSD (1984 vintage) print spooler and only in the order used by the original BSD (1984 vintage) print spooler. The `:bk` (*Berkely Kompatible*) option causes **lpd** to generate control files compatible with this format. If you encounter problems with transferring files to these systems, try using the `:bk` option first.

Figure 10-1. Using `:bk` (Berkeley Kompatible) Flag

```
lp:force_localhost@     # make control files berkeley
  :bk
  :lp=...
```

Chapter 11. Managing Enterprise Level Printing Systems

If you are doing management of more than 20 printers, then you already know the headaches. You need to make the printers available to all/some/none of your users, each user has a different set of requirements, and no two printers are the same. The following are some helpful suggestions and recipes for managing printer information.

11.1. Templates and Standard Configurations

Figure 11-1. Templates in Printcaps

```
.common
  :sh:sd=/var/spool/lpd/%P:force_localhost
.hplj4
  :ifhp=model=hp4
  :filter=/.../ifhp

# server information
hp4:server:tc=.common,.hplj4
  :lp=10.0.0.14%9100

#client information
hp4:client:lp=%P@server1
```

You should set up a standard set of templates to see what you have. You can then use **lpc** to see what the printcap is.

Figure 11-2. Using lpc client all

```
.defaults
 :ab@
 ...

.config

.all
 :t1
 :t2

#Printcap Information
t1|t1_*
 :filter=/usr/local/libexec/filters/ifhp
 :lp=/var/tmp/t1_lp
 :sd=/var/spool/lpd/%P
t2|Test Printer 2
 :lf=log
 :lp=t1@h110.private
```

```
:sd=/var/spool/lpd/%P
```

You can use `lpc client all` to see the printcap information as the **LPRng** clients would see it. This allows you to check out the various printcaps before you use them. You can also use `lpc server all` to see the printcap information as the **lpd** server would see it.

11.2. Master Print Servers, One User Printcap

Figure 11-3. Master User Printcap File, No Local Spooling

```
# Just information for clients
#  list all of the printers for this server
lp1|lp2|.....
  :client:lp=%Q@server1.private:force_localhost@
lp99|....
  :client:lp=%Q@server2.private:force_localhost@
```

This will allow you to send jobs directly to the print server. You use the `lp=%Q@server` form for the destination. Note that you will need **LPRng** version 3.8.0 or later for this to work.

11.3. Master Print Servers, Local Spooling

Figure 11-4. Master User Printcap File, Local Spooling

```
# Just information for clients
#  list all of the printers for this server
lp1|lp2|.....
  :client:lp=%Q@server1.private:force_localhost

lp99|....
  :client:lp=%Q@server2.private:force_localhost
```

Observe that you have two queues, one per print server. You use the `lp=%Q@server` form of the destination. Note that you will need **LPRng** version 3.8.0 or later for this to work.

11.4. Master Print Servers, Selection by User

Figure 11-5. Master User Printcap File, No Local Spooling

```
#  list all of the printers for this server
lp1|lp2|.....
OR
lp1|*
  :client:lp=%Q@server1.private:force_localhost@
```

```
  :oh=*.engineering.private

lp1|lp2|.....
OR
lp1|*
  :client:lp=%Q@server2.private:force_localhost@
  :oh=*.marketing.private
```

You can use the `:oh=`*Pattern* to select the set of printcap entries that can be used on a host. The *Pattern* can be IP Address/netmask (`10.0.0.0/24` or `10.0.0.0/255.255.255.0`) or a wildcard match for the DNS resovled host name (`*.eng.private`).

11.5. The Great Grand Dad Of All Printcap Files

Figure 11-6. All In One

```
#  list all of the printers for this server
lp1|lp2|.....
  :client:lp=%Q@server1.private:force_localhost@
  :oh=*.engineering.private
lp1|lp2|.....
  :client:lp=%Q@server2.private:force_localhost@
  :oh=*.marketing.private
lp1:server
  :....
lp2:server
  :....
```

Add all the printer information in as well. Huge printcap files. But very easy to manage. But how do you get them to the user?

11.6. Using Printcap Filters and Central Databases

Figure 11-7. Printcap Path Configuration Information

```
/etc/lpd.conf:

# Purpose: lpd printcap path
#   default lpd_printcap_path= (STRING)
# Purpose: /etc/printcap files
#   default printcap_path= /etc/printcap   (STRING)
printcap_path=|/usr/local/libexec/get_printcap
```

If the `/etc/lpd.conf` `printcap_path` value is a filter, then the **LPRng** application will write the name of the requested printer to the `STDIN` of the filter program and expect to read one or more printcap entries from `STDOUT`. If the printcap entry contains a `:tc` reference, then this entry will be looked up in turn.

Figure 11-8. Example of Returned Printcap Value

```
Configuration: printcap_path = |/usr/local/bin/get_ldap_pc

h110: {917} % lpr -Plp

  Printcap access equivalent to Perlish:
   $printcap = `echo lp | /usr/local/bin/get_ldap_pc`

Configuration: lpd_printcap_path = |/usr/local/bin/get_lpd_ldap_pc
   lpd server will do:
   $printcap = `echo lp | /usr/local/bin/get_lpd_ldap_pc`
```

The exercise of building the necessary `LDAP` database, extracting the information in a printcap form using the Perl

Chapter 12. LPRngTool

Figure 12-1. Starting Screen

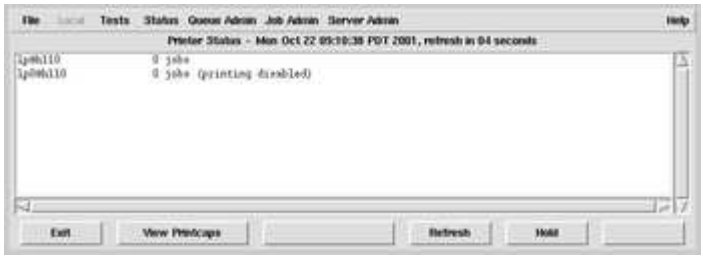

Figure 12-2. Printcap Entry Selection

Figure 12-3. Add A Printer

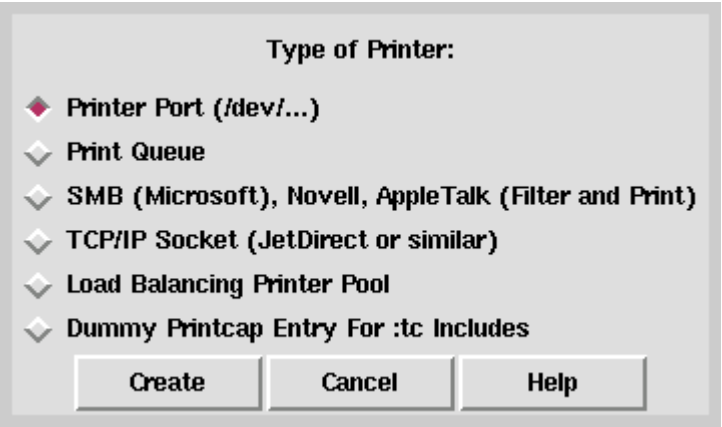

Figure 12-4. Option Specification

Figure 12-5. Advanced Options

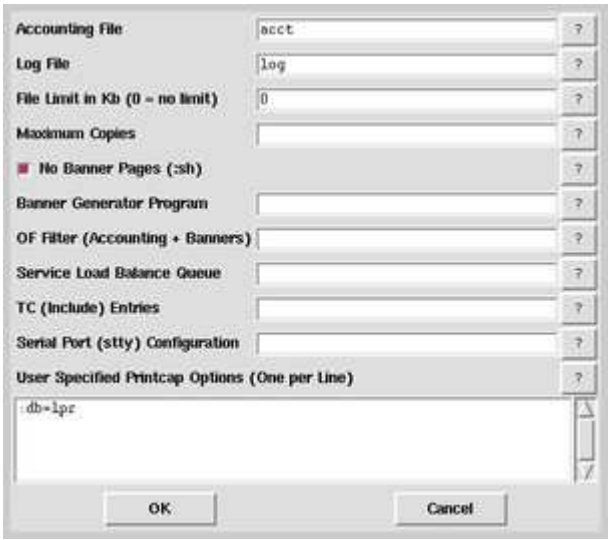

Figure 12-6. ifhp Options

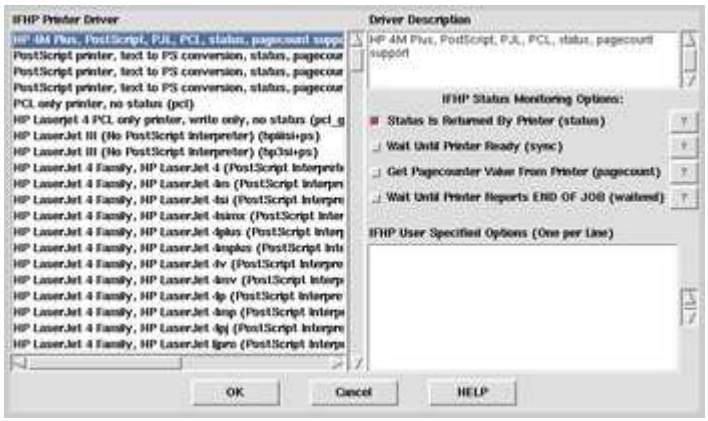

Figure 12-7. Saving Printcap Entry

Figure 12-8. Checkpc Results

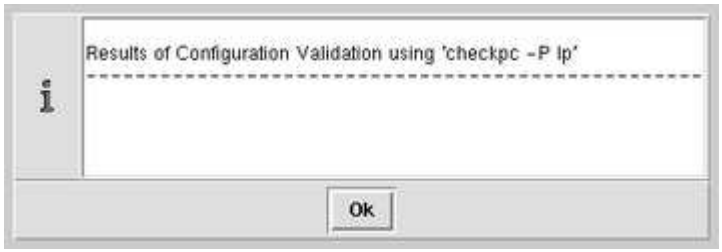

Appendix A. LPRng

The **LPRng** print spooler software was developed to be robust, reliable, secure, scalable, and portable. It has been used since 1988 in extremely demanding academic printing environments such as University of Minnesota, MIT, and Rutgers, commercial companies such as Dow Jones and Abbot Pharmaceuticals, as well as being distributed with Linux, FreeBSD, and other systems. Each of these environments has a unique set of problems, demanding various configuration and administrative capabilities. For example, the simple single user system with a single or limited number of printers requires easy configuration and simple diagnostic procedures, while the network based printing system requires highly robust error logging, authentication, and failover support. **LPRng** provides a highly flexible configuration system that allows it to perform optimally in all of these environments.

The **LPRng** software has three components: the **lpd** print spooler and the user client applications **lpr**, **lpq**, **lprm**, etc.; the IFHP print filter (**ifhp**) which is used to convert jobs into a suitable for a particular printer, and the the LPRngTool Graphic User Interface (**lprngtool**) which provides a simple and easy to use configuration and monitoring tool for the **LPRng** print spooler.

LPRng mimics many of the features of the *vintage* or *legacy* Berkeley (University of California - Berkeley) Line Printer (LPR) package found on Berkeley derivatives of the Unix operating system. **LPRng** will print a document with little or no knowledge of the content or special processing required to print the document on a stand-alone machine or in a distributed printing environment. New (as compared to Berkeley LPR) features include: lightweight **lpr**, **lpc** and **lprm** programs, dynamic redirection of print queues, automatic job holding, highly verbose diagnostics, load balancing queues; enhanced security (SUID not required in most environments), and easy configuration.

LPRng started life at the University of Waterloo in 1986 as PLP (Public Line Printer), a replacement for the original BSD **lpd** code. This was a one-shot effort by the author, Patrick Powell, to develop freely redistributed code without the restrictions of the BSD/AT&T license and would allow non-licensed sites to fix and patch problems. From 1988 to 1992 individuals and groups added features, hacked, slashed, and modified the PLP code, coordinated largely by Justin Mason (`<jmason@iona.ie>`) who started the **LPRng** mailing list.

In 1992 while at San Diego State University Prof. Powell redesigned and reimplemented the PLP code and named the result **LPRng**. The goals of the **LPRng** project were to build a server system that was as close to user abuse proof as possible, that would provide services limited only by the inherent capacities of the support system, RFC1179 compliant, and with extensive debugging capabilities to allow quick and easy diagnostics of problems.

In 1999 the code base for **LPRng** was again reorganized in order to provide a common method for running on non-UNIX platforms such as Microsoft Windows NT, Apple Rhapsody, and embedded systems.

As a side effect of this work, many security problems that could develop were identified and steps taken to ensure that they were not present in **LPRng**. For example, **LPRng** clients such as lpr, lprm, lpc, and lpq can run as ordinary users programs, the lpd server can run as a non-root user once a network port has been opened, and all text formatting operations done by **LPRng** use a very restricted and highly secure version of the **snprintf** function.

A.1. Documentation

The main **LPRng** documentation is the LPRng-HOWTO, which is available in several formats. Information about **LPRng** and the latest release can be found on the **LPRng** web page http://www.lprng.com/LPRng.html

The **ifhp** documentation is the IFHP-HOWTO, which is available in the **ifhp** distribution. Information about **ifhp** and the latest release can be found on the **LPRng** web page http://www.lprng.com/LPRng.html

There is also a mailing list at lprng@lprng.com (mailto:lprng-request@lprng.com?subject=subscribe). To post to the list you must subscribe by sending send an email to lprng-request@lprng.com (mailto:lprng-request@lprng.com?subject=subscribe), with the message subject or body containing the word 'subscribe' or 'help'.

Several presentations of **LPRng** and print spooling software have been made at the Large Installation System Administrator (LISA) conferences. The presentation at the LISA 98 conference is in the PowerPoint file `LISA98.ppt` in the **LPRng** distribution documentation.

A.2. Installation

It is recommended that installation be done from the source distribution, and that the files be put in the `/usr/bin`, `/usr/sbin`, and `/etc` directories, as most existing applications require them there.

Get the source code distribution from the main **LPRng** site or one of the mirror sites show in Section A.5. The install using:

```
%> gunzip -c LPRng-XXX.tgz | tar xvf -
%> cd LPRng-XXX
   (You might want to read the README and INSTALL files)
%> ./configure --prefix=/usr --sysconfdir=/etc
   #if your OS does not support shared libraries, use:
   # ./configure --disable-shared --prefix=/usr --sysconfdir=/etc
%> make clean all
%> su
password: xxxxx
#> make install
```

A.3. License

The **LPRng** Print Spooler and the ifhp Print Filter software are distributed under the GNU Public License (GPL) and the Artistic License (license.txt). Users can choose to redistribute or use the software under a license that is appropriate for their purpose. Other licenses and distribution agreements are available by contacting AStArt Technologies (http://www.astart.com) for information.

A.4. Commercial Support

AStArt Technologies (http://www.astart.com) provides commercial support and enhancements for the **LPRng** and other network software. AStArt provides network and system consulting services for UNIX and NT systems, as well as real time and network software.

A.5. Web Site, FTP Site, and Mirrors

Web Page: http://www.lprng.com

Main FTP Site:

ftp://ftp.lprng.com/pub/LPRng (US)

Mirrors:

ftp://ftp.cs.columbia.edu/pub/archives/pkg/LPRng (US)
ftp://ftp.cise.ufl.edu/pub/mirrors/LPRng (US)
ftp://ftp.cs.umn.edu/pub/LPRng (US)
ftp://uiarchive.uiuc.edu/pub/packages/LPRng (US)
ftp://ftp.sage-au.org.au/pub/printing/spooler/lprng/ (AU)
ftp://mirror.aarnet.edu.au/pub/LPRng/ (AU/NZ)
http://mirror.aarnet.edu.au/pub/LPRng/ (AU/NZ)
ftp://sunsite.ualberta.ca/pub/Mirror/LPRng (CA)
ftp://ftp.informatik.uni-hamburg.de/pub/os/unix/utils/LPRng (DE)
ftp://ftp.uni-paderborn.de/pub/unix/printer/LPRng (DE)
ftp://ftp.mono.org/pub/LPRng (UK)
ftp://ftp.iona.com/pub/plp/LPRng (IE)
ftp://uabgate.uab.ericsson.se/pub/unix/LPRng (SE)

A.6. Mailing List

To join the **LPRng** mailing list, please send mail to lprng-request@lprng.com (mailto: lprng-request@lprng.com) with the word 'subscribe' in the BODY.

The **LPRng** mailing list is archived on http://www.findmail.com/list/lprng

A.7. PGP Public Key

The **LPRng** distributions have an MD5 checksum calculated, which is then signed with a PGP public key. Here is the key for validating the checksums:

```
Type Bits/KeyID    Date       User ID
pub  1024/00D95C9D 1997/01/31 Patrick A. Powell \
   <papowell@lprng.com>
```

```
-----BEGIN PGP PUBLIC KEY BLOCK-----
Version: 2.6.3i

mQCNAzLygTQAAAEEANBW5fPYjN3wSAnP9xWOUc3CvsMUxjip0cN2sY5qrdoJyIhn
qbAspBopR+tGQfyp5T7C21yfWRRnfXmoJ3FVtgToAsJUYmzoSFY08eDx+rmSqCLe
rdJjX8aG8jVXpGipEo9U4QsUK+OKzx3/y/OaK4cizoWqKvy1l4lEzDsA2VydAAUT
tCdQYXRyaWNrIEEuIFBvd2VsbCA8cGFwb3dlbGxAYXN0YXJ0LmNvbT6JAJUDBRA0
XonoiUTMOwDZXJ0BAQ2cBAC7zU9Fn3sC3x0USJ+3vjhg/qA+Gjb5Fi1dJd4solc4
vJvtf0UL/1/rGipbR+A0XHpHzJUMP9ZfJzKZjaK/d0ZBNlS3i+JnypypeQiAqo9t
FV0OyUCwDfWybgAORuAa2V6UJnAhvj/7TpxMmCApolaIb4yFyKunHa8aBxN+17Ro
rrQlUGF0cmljayBBLiBQb3dlbGwgPHBhcG93ZWxsQHNkc3UuZWR1PokAlQMFEDLy
gTSJRMw7ANlcnQEBYBYD/0zTeoiDNnI+NjaIei6+6z6oakqO70qFVx0FG3aP3kRH
WlDhdtFaAuaMRh+RItHfFfcHhw5K7jiJdgKiTgGfj5Vt3OdHYkeeh/sddqgf9YnS
tpj0u5NfrotPTUw39n6YTgS5/aW0PQfO9dx7jVUcGeod1TGXTe9mIhDMwDJI4J14
=3Zbp
-----END PGP PUBLIC KEY BLOCK-----
```

Appendix B. References and Standards

The following references and standards have been used in the development of the **LPRng** software.

B.1. RFCs

During the early development of the Internet developers did not want to go through the laborious process of developing formal standards and applying to a standards body such as the EIA, IEEE, or ISO. Instead, they called the standards documents they developed [Requests for Comments]. These soon became *de facto* standards, and with the formal acceptance of the TCP/IP protocol as a network standard, *de jure* as well.

You can get copies of the RFCs from literally hundreds of network sites, including http://www.isi.edu, http://www.faqs.org/rfcs, NIS.NSF.NET (ftp://NIS.NSF.NET), RFC.JVNC.NET (ftp://RFC.JVNC.NET), or FTP.ISI.EDU (ftp://FTP.ISI.EDU).

The [RFC1179 - Line Printer Daemon Protocol] describes the protocol used to transfer jobs from client program to print server. See RFC1179 for more a discussion of this protocol and more details about the RFC. The rfc1179.txt file is included in the **LPRng** distribution documentation.

B.2. PostScript

PostScript is one of the *de facto* standards for print jobs. The Adobe Corporation (http://www.adobe.com) provides an excellent set of references for the PostScript language. They have made many of these available for downloading from their web sites or have published them in book form.

The [PostScript Language Reference Manual] contains a great deal of technical information about the PostScript Language, and is the language reference manual.

The [PostScript Language Tutorial and Cookbook] is a very nice and easy to read introduction to PostScript programming, and has some very useful utilities. Combined with **GhostScript** and the **gv** display program you can very easily learn to write your own small PostScript programs, and more importantly, can learn to understand the contents of PostScript files.

The [PostScript Language Program Design] is the companion to the [PostScript Language Tutorial and Cookbook], and has more complex examples of PostScript programs. More importantly, it also introduces, although without explanation, the PostScript Document Structuring Conventions described in Appendix G of the The [PostScript Language Reference Manual]. This alone makes it useful.

B.3. HP PCL 5

The Hewlett-Packard (HP) PCL Printer Language is the second de-facto standard for print jobs. Currently, Hewlett-Packard makes documentation for PCL available through their [Developer Program]. You will need to register and then search their site for the [PCL 5 Printer Language Reference Manual].

B.4. HP PJL

The Hewlett-Packard (HP) Printer Job Language is used to control various features of HP printers. The [Printer Job Language Reference Manual] is also available from Hewlett-Packard (http://www.hp.com) through their [Developer Program].

B.5. PDF

The Portable Document Format (`pdf`) was developed by Adobe to be a more useful method of distributing documentation for view by online systems and software. The [Portable Document Format Reference Manual] is available from Adobe (http://www.adobe.com). While `pdf` is not used directly as a print job language, it is one of the more common formats for files that need to be printed. It can be converted to PostScript by most `pdf` viewers such as GhostScript and Adobe Acrobat.

Appendix C. RFC 1179 - Line Printer Daemon Protocol

RFC1179 can be obtained from the **LPRng** distribution, in the LPRng_DOC/rfc1179 directory, or from one of many sites which mirror the RFCs.

This RFC is an *informational* RFC, which means that the information in it is meant as a guide to users, and not as a fixed standard. In addition, the RFC tried to document the behavior of the BSD **lpd** print server, and left out many details dealing with error recover, error messages, extensions to the protocol, etc.

In this section, I will try to explain what RFC1179 specifies as a protocol, and many of the problems encountered in trying to use it.

C.1. Ports and Connections

Options used:

- `lpd_port=`*Port for* ***lpd*** *to accept connection*
- `originate_port=`*Ports to originate connections on*
- `reuse_addr` FLAG *Set SO_REUSEADDR flag on connection*
- `retry_econnrefused` FLAG *Retry on connect ECONNREFUSED error*
- `retry_nolink` FLAG *Retry on device open or connection ffailure*
- `socket_linger=`*socket linger timeout*

RFC1179 requires that the **lpd** server listen for TCP/IP connections on port 515. This port is registered with the Internet Naming Authority, and the `/etc/services` file or TCP/IP services database usually has an entry:

```
printer     515/tcp     spooler     # line printer spooler
```

RFC1179 explicitly states that all connections to port 515 must originate from ports 721-731. The reason for this restriction is due to the UNIX concept of *reserved* and *privileged* ports. By convention, ports in the range 1-1023 can only *bound* by processes whose Effective User ID (EUID) is 0 (root). This, ordinary users could not originate a connection from the reserved or privileged port range.

In a UNIX environment, this means that the user programs **lpr**, **lpq**, **lprm**, and **lpc** would have to be SETUID root.

As experience has shown, for security purposes, the fewer programs that need to have privileged status, the better. **LPRng** uses the `lpd_port=printer` configuration option to set the actual port to be use. By default, this is port 515, but can be set to other values.

The restriction of originating ports to 721-731 causes another set of problems. Part of the TCP/IP protocol is concerned with avoiding communications problems resulting from the arrival of old or *stale* packets. When a connection between `sourcehost, sourceport` and `desthost, destport` is made, a set of sequence numbers is established and used for sending and acknowledgement of data. When the connection terminates, the TCP/IP protocol restricts the establishment of a new connection between `sourcehost, sourceport` and `desthost, destport` for a period long enough for all *stale* packets to be removed from the system. This is approximately 10 minutes long.

In order to simplify assignments of ports, timing out connections, and other matters, many TCP/IP packages do keep track of explicit connections *originating* from a port, but simply prevent the port from being reused for either origination or reception of a connection. They do, however, keep track of the active connections *to* a port, and perform timeouts on these. This is usually much simpler to implement, as it can be done with a list attached to the port.

This implementation method creates some problems when a large number of connections must be originated from a relatively small number of port numbers. Observe what happens when host 1 tries to send a large number of jobs to a server 2. The following connections are established and terminated: `host 1, port 721` and `host 2, port 515` `host 1, port 722` and `host 2, port 515` `host 1, port 723` and `host 2, port 515` `host 1, port 724` and `host 2, port 515` `host 1, port 725` and `host 2, port 515` `host 1, port 726` and `host 2, port 515` `host 1, port 727` and `host 2, port 515` `host 1, port 728` and `host 2, port 515` `host 1, port 729` and `host 2, port 515` `host 1, port 730` and `host 2, port 515` `host 1, port 731` and `host 2, port 515`

Now according to the RFC1179 rules and the TCP/IP protocol, we will have to wait until one of these connections terminates before we can make another. On the originating system, if the TCP/IP implementation does timeouts on the originating port, we will have to wait for the timeout to elapse before we can make a new connection. Unfortunately, there is no way to find out what the status of the port is, so we will have to try them each in turn until we get a successful connection.

The **LPRng** code has tried to provide several methods to deal with these problems. Firstly, the `originate_port=512 1023` option specifies the range of ports used to originate connections when the software is running either as ROOT or SETUID root. By strict RFC1179 rules, this should be `originate_port=721 731`, but it turns out that most BSD **lpd** based implementations only check for a *reserved* originating port. By using 512 ports we get a greatly reduced rate of errors due to lack of ports due to pending timeouts.

However, on some systems which are acting as servers for a large number of printers even increasing this port range is insufficient, and steps need to be taken use the originating port numbers more efficiently. The Berkeley TCP/IP implementation `getsockopt()` and `setsockopt()` allows the user to manipulate some of the underlying timeouts and options of the TCP/IP network. When a TCP/IP connection is established, the `setsockopt()` facility can be used to set the `SO_REUSEADDR` flag on the connection. This flag effectively sets the timeout value on the ports and connections to 0, allowing immediate reuse of the ports. When done on an originating end of a connection, this will allow the originating port number to be reused immediately.

It would appear that by setting `SO_REUSEADDR` on the originating end that we have solved our problems. However, unless the destination end of the connection sets its `SO_REUSEADDR` flag on the connection, it will still do a timeout. Thus when we try to make a connection from a port that was active within a short period of time to the same host, then it will reject the connection until the timeout is over.

The `reuse_addr` flag (default off) forces the **LPRng** software to set the `SO_REUSEADDR` flag on

originating connections. As indicated, this will allow ports to be reused immediately for outgoing connections, rather than waiting for a timeout.

While the `reuse_addr` flag usually allows us to reuse ports, there is still the problem of dealing with connections failing due to the remote site rejecting the connection due to a pending timeout from a previous connection. A careful study of the original BSD TCP/IP network code and of some others indicates that when a connection fails due to a pending timeout, an ECONNREFUSED error code is returned to a `connect()` system call. If this happens and we suspect that the remote site is rejecting the connection due to a timeout problem, then we should retry making the connection but from a new port, and continue retrying until all possible ports are used.

The `retry_econnrefused` (default on) flag is used to specify that we retry connections in this manner. When this is set, a `connection refused` error causes the connection to be retried using a new port. This will be repeated until all available ports have been tried.

When printing a job and the **lpd** server connection to a remote site or device open fails, the `retry_nolink` (default on) will cause the attempt to be retried indefinitely. The combination of `retry_econnrefused` and `retry_nolink` will provide robust connection attempts to remote systems.

While the above problems cause difficulties when making connections, there are also problems when terminating connections. After closing a socket, the TCP/IP software will try to flush any pending data to the destination. Unfortunately, on some systems it will only do this while the process is active. This has caused problems on systems which terminate a process it has received an abnormal (signal caused) termination.

The `setsockopt()` SO_LINGER option allows the user to specify that when a socket is closed normally, that the process should block until pending data is flushed or for the `socket_linger` period. If `socket_linger` is 0, then no SO_LINGER operation is done.

In summary, if you experience problems with connection failures due to port exhaustion, first try setting the `reuse_port` flag, and you should see a reduction. Check to ensure that the `retry_econnrefused` and `retry_nolink` flags are set, and the error code in the log and status files. If the failures continue, then the problem is caused by the remote end having timeout limitations and there is little you can do except to set a very long `connect_retry` interval, say `connect_retry=120` (2 minutes).

C.2. Protocol Requests and Replies

Options used:

- `remote_support=`*Remote operations supported*

After a connection has been established, a request can be sent to the **lpd** server. The request consists of a single octet indicating the request type, followed by the printer (or print queue) name, followed by a set of options for the request, followed by a LF (line feed) character.

Table C-1. RFC1179 Commands

NNN	RFC1179	Operation	program

NNN	RFC1179	Operation	program
1	yes	start print	**lpc**
2	yes	transfer a printer job	**lpr**
3	yes	print short form of queue status	**lpr**
4	yes	print long form of queue status	**lpr**
5	yes	remove jobs	**lprm**
6	**LPRng**	do control operation	**lpc**
7	**LPRng**	transfer a block format print job	**lpr**
8	**LPRng**	secure command transfer	**lpc**
9	**LPRng**	verbose status information	**lpr**

After the request has been sent, then a reply will be returned. In general the reply has the following form:

```
\000\n    Success
\NNN\n    Failure (NNN is error code)
text\n    Text or status information
```

As can be seen, this protocol is extremely simple, but there are a set of problems due to the loosely written language of RFC1179.

1. Firstly, while RFC1179 sets limits on the lengths of commands, it does not strictly set limits on the characters set used in the commands. This can result in problems when trying to print status information, headers on banners, and other details.
2. The original RFC1179 protocol did not provide any way to do remote control of queues or **lpd** servers. This has been added to the protocol. As a side effect, if you try to use **lpc** to control a non-**LPRng** printer, it will not work.
3. You can specify that a network printer is non-**LPRng** by using the `remote_support=RQVMC` option and specify the operations supported by the printer. The letters R, Q, M, and C stand for **lpr**, **lpq**, **lprm**, and **lpc** operations respectively, and indicate that these are supported. If `remote_support` does not allow a particular operation, then the **LPRng** software will not send a corresponding request to the printer. For example, `remote_support=R` would restrict operations to spooling jobs only, and the **LPRng** software would not query the printer for status.

C.3. Job Transfer

Options used:

- `longnumber` FLAG *Long job number (6 digits)*
- `send_data_first` FLAG *Send data files first*
- `use_shorthost` *Use short hostname*

A job transfer operation starts with a job transfer request, followed by several file transfer operations. At the end of the file transfers, the connection should be closed.

A file transfer request has the form:

Command	Purpose
\001\n	abort
\002nnnn cfname	control file transfer
\003nnnn dfname	data file transfer

The abort operation is used to terminate job transfer and indicate that the job should not be processed for printing. The connection will be closed and the partly transferred job will be discarded.

The control file and data file transfer commands have a length (in bytes) of the file and the name of the file to be transferred. When the command is received, the server will reply with a status line:

Status	Purpose
\000	Accepted, proceed
\nnn	Rejected with error code

The reply is only a single octet. Some defective implementations of RFC1179 send a LF after the octet, which makes life very difficult. **LPRng** makes an effort to detect these non-conforming RFC1179 systems and will accept jobs from them. However, it will not send jobs to them.

If **LPRng** sends a reject code, as an extension to RFC1179 it also sends an error message. Note that the values for error codes are not defined, nor are their causes. **LPRng** uses the following values for error codes, which appear to be compatible with many, but not all, of the BSD **lpd** based systems:

Code	Error
\000	Accepted, proceed
\001	Queue not accepting jobs
\002	Queue temporarily full, retry later
\003	Bad job format, do not retry

When the sender gets the reply indicating success, it sends the `nnnn` bytes of the control or data file, followed by a `\000` octet. The receiver will then reply as above; a single `\000` octet indicating success.

The above procedure is carried out until all data files and the control file of a job are transferred.

RFC1179 is silent on the following issues:

1. When sending a job, do you send the control file first, followed by the data file(s), or the data files first?
2. When sending multiple jobs, can you send them on a single connection, or do you have to establish a new connection for each job?

LPRng will *accept* jobs whether they are sent control or data files first. By default, it sends the control file first, followed by the data file. If the destination system requires that the data files be sent first, the `send_data_first` printcap option can be used to force data files to be sent first.

RFC1179 states that:

> The name of the control file ... should start with ASCII "cfA", followed by a three digit job number, followed by the host name which has constructed the control file.

The *should* in this wording indicates that this is simply a guideline, and that other formats are possible. Some of the major problems with this format are as follows:

1. The restriction to 3 digits means that at most 1000 jobs can be in a queue. Strangely, some systems generate far more than 1000 jobs a day, and need to archive them on a regular basis. The `longnumber` option will allow **LPRng** to use a 6 digit job number for files in the print queue.
2. The host name format is not specified. Some implementations consider that this is the short host name, while others think it is the fully qualified domain name (FQDN). **LPRng**, by default, will use the FQDN host name. However, the `use_shorthost` option will force it to use short host names in control and data files.
3. The `cfA` control file name was modified to allow the job priority to be used as the A letter of the control file. By default, this is A (lowest, i.e. `cfA`) and but can range to Z (highest, i.e. `cfZ`). All known spoolers except **LPRng** seem to ignore the actual value of the letter.

C.4. Data File Transfer

As mentioned before a data file is transferred using the command below.

Command	Purpose
\003nnnn dfname	data file transfer

From RFC1179:

> The data file may contain any 8 bit values at all. The total number of bytes in the stream may be sent as the first operand, otherwise the field should be cleared to 0. The name of the data file should start with ASCII "dfA". This should be followed by a three digit job number. The job number should be followed by the host name which has constructed the data file. Interpretation of the contents of the data file is determined by the contents of the corresponding control file.

There are several surprises in RFC1179.

1. Apparently a job should only consist of a single data file. This is a severe limitation, and in fact the BSD **lpr** and other print spoolers process jobs with multiple data files. By convention, these data files have names of the form `dfA`, `dfB`, ... `dfZ`, `dfa`, `dfz`.
2. The RFC does not specify that the control file and data file job numbers must be identical. Most implementations follow this convention, which simplifies life tremendously.
3. The RFC does not specify that the control file and data file job host names must be identical. Most implementations follow this convention, which simplifies life tremendously.
4. A zero length data file does not cause a data transfer to take place. **LPRng** modifies this action to be slightly different. When a zero length data file transfer is indicated, all of the input until the connection is closed is used as the contents of the data file.

   When *piping* into the **lpr** program, this can be very useful as it eliminates the need to create temporary files on the local host. Note that some print spoolers do not use this interpretation, and this option should be used carefully.

C.5. Control File Contents

The control file consists of a set of lines which either provide printing information or specify data files to be printed. The information lines start with upper case letters or digits, while the data files lines start with lower case letters. Here is a sample control file:

```
Hh4.private
J(stdin)
CA
Lpapowell
Apapowell@h4+955
Ppapowell
fdfA955h4.private
N(stdin)
UdfA955h4.private
```

The following are the letters and their meanings in the control file.

Table C-2. Control File Lines and Purpose

Letter	Defined	Purpose
A	**LPRng**	Identifier for job
C	RFC1179	Class for banner page
H	RFC1179	Host name
I	RFC1179	Indent Printing
J	RFC1179	Job name for banner page
L	RFC1179	Print banner page
M	RFC1179	Mail When Printed
N	RFC1179	Name of source file
P	RFC1179	User identification
Q	**LPRng**	Queue name
R	**LPRng**	Accounting info
S	RFC1179	Symbolic link data
T	RFC1179	Title for pr
U	RFC1179	Unlink data file
W	RFC1179	Width of output
Z	**LPRng**	Filter options
1	RFC1179	troff R font
2	RFC1179	troff I font
3	RFC1179	troff B font
4	RFC1179	troff S font
c	RFC1179	Plot CIF file
d	RFC1179	Print DVI file
f	RFC1179	Print formatted file
g	RFC1179	Plot file
k	RFC1179	Reserved for use by Kerberized **LPRng** clients and servers.
l	RFC1179	Print file leaving control characters
n	RFC1179	Print ditroff output file
o	RFC1179	Print Postscript output file
p	RFC1179	Print file with 'pr' format
t	RFC1179	Print troff output file
v	RFC1179	Print raster file
z	RFC1179	Reserved for future use with the Palladium print system.

The `A` (Identifier) line was introduced to record a unique system wide job identifier for **LPRng** submitted jobs. This is basically formed from the user name, job number, and host at the time of submission. For example: `papowell@h4+955` is job number 995 submitted by papowell from host h4.

The `C` (Class) line is set by the `lpr -C class` option, and the value can be used to control printing. For

example, the `lpc class zone` command would restrict job printing to only jobs with class `zone`.

The `H` (hostname), `P` (username), and `J` (jobname) fields are used to identify the host and user which sent the job, and to provide information to be displayed by **lpq** when reporting job status.

The `L` (print banner page) field is one that has caused many problems for users. RFC1179 indicates that its presence causes the banner page to be printed, and its absence suppresses banner pages. The `lpr -h` option suppresses putting this line into the control file. Usually the `L` field is a duplicate of the `P` field.

The `M` (mail information) field supplies a mail address for **LPRng** to send mail to when a job is completed.

The `N` (file name) field is usually provided to identify the file name corresponding to the data file. This can be used to print names on page separators, etc. **LPRng** largely ignores this line.

The `I` (indent) and `W` (width) fields are supposed to specify a page indent and width for printing. These fields are passed to filters if they are present.

The `Q` (queue name) field is an **LPRng** extension, and contains the name of the print queue the job was originally sent to.

The `R` (accounting info) field was added by **LPRng** to allow a specified account to be billed for job printing. The `lpr -Rname` option can be used to specify the accounting name.

The `S` (symbolic link) and `U` (unlink after printing) lines were used by the original BSD **lpd** print system to control how it passed files to the print server. **LPRng** ignores these lines. In fact, it will remove `S` lines and force the `U` lines to refer only to job data files. This closes a nasty security loophole on non-**LPRng** print spoolers.

The `T` (pr job title) is used with the `lpr -p` operation to supply a banner to the `pr` program.

The `Z` (filter options) value is specified with `lpr -Zoption` and is passed to the data file filters during the printing operation.

All of the lower case letters are reserved for format specifications for data files. In the control file, these are followed by the name of the data file to which they correspond. While in principle different data files in the control file can have different formats, this has not been implemented in any known spooling system.

C.6. lpq Requests

The RFC1179 protocol specifies that **lpq** print status requests can be sent to the **lpd** server. The lpq requests have the format:

```
\003printer [id]* \n    short
\004printer [id]* \n    long
\009printer [id]* \n    LPRng extension- verbose
```

The **lpd** print server will then return queue status and close the data connection.

RFC1179 does not state in any manner what the format of the queue status should be. Thus, implementors have been free to augment or change the status as they like. Even the BSD **lpq** status format has been changed from different versions.

The `id` values are used to select the jobs to be displayed. **LPRng** displays any job whose ID, hostname, or user name information from the control file `A`, `H`, or `P` fields match any of the id values.

Note that since there is no identification of the information requestor, then restriction of information is almost impossible.

C.7. lprm Requests

The RFC1179 protocol specifies that **lprm** job removal requests can be sent to the **lpd** server. The lpq requests have the format:

```
\005printer user [id]* \n
```

The **lpd** print server will search the specified print queue and remove any job whose ID, hostname, or user name information from the control file `A`, `H`, or `P` fields match any of the id values and for which the user has permission to perform a removal operation.

Most RFC1179 compatible spoolers use the user information in the request as the name of the user which spooled the job. However, in a network environment this is extremely easy to fabricate, and is at best a weak type of authentication.

C.8. LPC Requests

LPRng has extended the RFC1179 protocol to allow queue and printer control commands to be sent to the **lpd** server. The format of these commands are:

```
\006printer user key [options]
```

The following commands are supported.

Table C-3. LPC Commands

Command	Operation
Command	Operation
`active [printer[@host]]`	check to see if server accepting connections
`abort (printer[@host] | all)`	terminate server process printing job
`disable (printer[@host] | all)`	disable queueing

Command	Operation
`debug (printer[@host] | all) debugparms`	set debug level for printer
`enable (printer[@host] | all)`	enable queueing
`hold (printer[@host] | all) (name[@host] | job | all)*`	hold job
`holdall (printer[@host] | all)`	hold all jobs on
`kill (printer[@host] | all)`	stop and restart server
`lpd [printer[@host]]`	get **lpd** PID for server
`lpq (printer[@host] | all) (name[@host] | job | all)*`	invoke **lpq**
`lprm (printer[@host] | all) (name[@host]|host|job| all)*`	invoke **lprm**
`move printer (user|jobid)* target`	move jobs to new queue
`noholdall (printer[@host] | all)`	hold all jobs off
`printcap (printer[@host] | all)`	report printcap values
`quit`	exit LPC
`redirect (printer[@host] | all) (printer@host | off )*`	redirect jobs
`release (printer[@host] | all) (name[@host] | job | all)*`	release job
`reread [printer[@host]]`	**lpd** reread database information
`start (printer[@host] | all)`	start printing
`status (printer[@host] | all)`	status of printers
`stop (printer[@host] | all)`	stop printing
`topq (printer[@host] | all) (name[@host] | job | all)*`	reorder job
`defaultq`	default queue for **lpd** server
`local (printer | all)`	client printcap and configuration information
`server (printer | all)`	server printcap and configuration information

Many of these commands support extremely specialized operations for print queue management, However, the following are the most commonly used and are supported by the BSD **lpd** print spooling system as well:

- `start, stop, enable, disable` Start and stop will start and stop printing for a specified queue. Enable and disable enable and disable sending and/or accepting jobs for the queue.
- `abort, kill` Abort will cause the process doing the actual job printing to be terminated. Kill does an abort, and then restarts the printing process. These commands are used to restart a queue printing after some disaster.
- `topq` Places selected jobs at the top of the print queue.

- `status` Shows a status display of the print spools on the server.

The following commands are extensions to the basic set provided by the BSD **lpd** system.

- `lpq, lprm` Invokes the lpq or lprm program from lpc. Useful when in the interactive mode.
- `hold, holdall, release` The hold command will cause the selected jobs to be held until released. The holdall jobs sets all jobs submitted to the queue to be held until released. The release command releases jobs for printing. If a job has had an error and is in the error state, the release command will cause it to be reprinted.
- `move, redirect` The move command will move selected jobs to the specified spool queue. The redirect command sends all jobs submitted to the queue to be sent to the specified queue.
- `active, lpd, reread` The active command will connect to the server for the printer. This is used to check to see if non-**LPRng** print servers are active. The lpd command will connect to the server and get the process id (PID) of the **lpd** server. The reread command causes a SIGHUP signal to be sent to the lpd process, causing it to reread the `lpd.conf`, `printcap`, and `lpd.perms` files. This is done when configuration information has been modified and the administrator wants to have the server use the new information.
- `debug` This is a desperation facility for developers that allows dynamic enabling of debug information generation. Not normally used in general operation.
- `local, server` These commands will print out the configuration information in the local `lpd.conf` file, as well as the printcap information for the specified printers; `client` prints what the **LPRng** clients (`lpr, lpq, ...`) would use while `server` prints what the **LPRng** server (**lpd**) would use if running on this host. This is an extremely useful diagnostic tool for administrators. Not normally used in general operation.

C.9. Block Job Transfer

Options used:

- `send_block_format` FLAG *Transfer job as a block*

In normal job transfer operations, the sender and receiver have a handshake interaction in order to transfer a print job. Each file is sent individually. The `send_block_format` option forces a Block Job Transfer operation. This causes the sender to transfer a single file containing all the job printing information, including control file and data files.

The transfer command line has the form:

```
\007printer size\n
```

The receiver will return any acknowledgement of a single 0 octet, and then the size bytes of the job will be transferred by the sender. At the end of the transfer a single 0 octet is added, and the receiver will indicate success by returning a single 0 octet. Any other value returned by the receiver indicates an error condition.

The file transferred by the sender is simply the command lines that it would have normally sent for job transfer, followed by the control or data file values.

C.10. Authenticated Transfer

RFC1179 does not provide any authentication or encryption mechanism for the transfer of jobs or commands to the **lpd** print server. The Authenticated Transfer operation was added to allow an encrypted or authenticated transfer of print jobs or commands.

Since there are various restrictions on the incorporation of authentication facilities into programs, **LPRng** supports authentication by providing a simple interface to encryption programs.

The idea is that when authentication is required when sending a job, **LPRng** will generate a block transfer job as described for the Block Job Transfer operation, and then invoke a set of programs to encryt and transfer the file, and encrypt and transfer the returned status.

Similarly, when sending a command, the command information will be placed in a file and the encrypted file will be transferred.

This technique means that the programs and support to do encryption are external to **LPRng**, and can use any type of method that they choose to implement the secure and/or authenticated transfer.